BAILEIGH INDUSTRIAL, INC.

HYDRAULIC SINGLE-PINCH ROLL MANUAL

APRIL 07 Ed.

Read carefully before operating

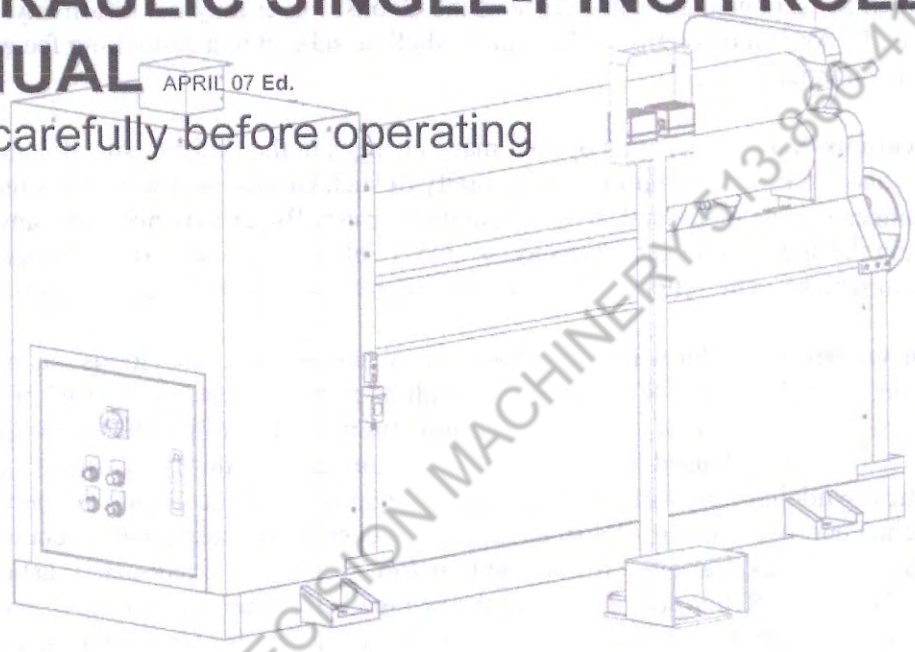

CINCINNATI PRECISION MACHINERY 513-860-4183

MODEL		SERIAL NO.		MFG. DATE	
VOLTAGE	Ø	V	Hz	MAIN MOTOR	Hp
GENERAL CAPACITY					
ROLLING LENGTH	ROLLING THICKNESS	ROLL DIA. Ø		MAX. PRESSURE	

WARRANTY & Other Legal Information

Inspection & Acceptance. Buyer shall inspect all Goods within a reasonable period of time after delivery, not to exceed ten (10) days. If Buyer rejects any Goods, Buyer must first obtain a Return Authorization Number ("RAN") before returning any goods to Seller. Goods returned without a RAN will be refused. Seller will not be responsible for any freight costs, damages to goods, or any other costs or liabilities pertaining to goods returned without a RAN. Seller shall have the right to substitute a conforming tender. Buyer will be responsible for all freight costs to and from Buyer and repackaging costs, if any, if Buyer refuses to accept shipment. If Goods are returned in unsaleable condition, Buyer shall be responsible for full value of the Goods. Buyer may not return any special order Goods. Any Goods returned hereunder shall be subject to a restocking fee equal to 30% of the invoice price.

Specifications. Seller may, at its option, make changes in the designs, specifications or components of the Goods to improve the safety of such Goods, or if in Seller's judgment, such changes will be beneficial to their operation or use. Buyer may not make any changes in the specifications for the Goods unless Seller approves of such changes in writing, in which event Seller may impose additional charges to implement such changes.

Limited Warranty. Seller warrants to the original end-user that the Goods manufactured or provided by Seller under this Agreement shall be free of defects in material or workmanship for a period of twelve (12) months from the date of purchase, provided that the Goods are installed, used, and maintained in accordance with any instruction manual or technical guidelines provided by the Seller or supplied with the Goods, if applicable. The original end-user must give written notice to Seller of any suspected defect in the Goods prior to the expiration of the warranty period. The original end-user must also obtain a RAN from Seller prior to returning any Goods to Seller for warranty service under this paragraph. Seller will not accept any responsibility for Goods returned without a RAN. The original end-user shall be responsible for all costs and expenses associated with returning the Goods to Seller for warranty service. In the event of a defect, Seller, at its sole option, shall repair or replace the defective Goods or refund to the original end-user the purchase price for such defective Goods. The foregoing warranty is Seller's sole obligation, and the original end-user's exclusive remedy, with regard to any defective Goods. This limited warranty does not apply to: (a) die sets, tooling, and saw blades; (b) periodic or routine maintenance and setup, (c) repair or replacement of the Goods due to normal wear and tear, (d) defects or damage to the Goods resulting from misuse, abuse, neglect, or accidents, (f) defects or damage to the Goods resulting from improper or unauthorized alterations, modifications, or changes; and (f) any Goods that has not been installed and/or maintained in accordance with the instruction manual or technical guidelines provided by Seller.

EXCLUSION OF OTHER WARRANTIES. THE FOREGOING LIMITED WARRANTY IS IN LIEU OF ALL OTHER WARRANTIES, EXPRESS OR IMPLIED. ANY AND ALL OTHER EXPRESS, STATUTORY OR IMPLIED WARRANTIES, INCLUDING BUT NOT LIMITED TO, ANY WARRANTY OF

CINCINNATI PRECISION MACHINERY 513-860-4139

MERCHANTABILITY OR FITNESS FOR ANY PARTICULAR PURPOSE ARE EXPRESSLY DISCLAIMED. NO WARRANTY IS MADE WHICH EXTENDS BEYOND THAT WHICH IS EXPRESSLY CONTAINED HEREIN.

LIMITATION OF LIABILITY. IN NO EVENT SHALL SELLER BE LIABLE TO BUYER OR ANY OTHER PARTY FOR ANY INCIDENTIAL, CONSEQUENTIAL OR SPECIAL DAMAGES (INCLUDING, WITHOUT LIMITATION, LOST PROFITS OR DOWN TIME) ARISING FROM OR IN MANNER CONNECTED WITH THE GOODS, ANY BREACH BY SELLER OR ITS AGENTS OF THIS AGREEMENT, OR ANY OTHER CAUSE WHATSOEVER, WHETHER BASED ON CONTRACT, TORT OR ANY OTHER THEORY OF LIABILITY. BUYER'S REMEDY WITH RESPECT TO ANY CLAIM ARISING UNDER THIS AGREEMENT IS STRICTLY LIMITED TO NO MORE THAN THE AMOUNT PAID BY THE BUYER FOR THE GOODS.

Force Majuere. Seller shall not be responsible for any delay in the delivery of, or failure to deliver, Goods due to causes beyond Seller's reasonable control including, without limitation, acts of God, acts of war or terrorism, enemy actions, hostilities, strikes, labor difficulties, embargoes, non-delivery or late delivery of materials, parts and equipment or transportation delays not caused by the fault of Seller, delays caused by civil authorities, governmental regulations or
orders, fire, lightening, natural disasters or any other cause beyond Seller's reasonable control. In the event of any such delay, performance will be postponed by such length of time as may be reasonably necessary to compensate for the delay.

Installation. If Buyer purchases any Goods that require installation, Buyer shall, at its expense, make all arrangements and connections necessary to install and operate the Goods. Buyer shall install the Goods in accordance with any Seller instructions and shall indemnify Seller against any and all damages, demands, suits, causes of action, claims and expenses (including actual attorneys' fees and costs) arising directly or indirectly out of Buyer's failure to properly install the Goods.

Work By Others; Safety Devices. Unless agreed to in writing by Seller, Seller has no responsibility for labor or work performed by Buyer or others, of any nature, relating to design, manufacture, fabrication, use, installation or provision of Goods. Buyer is solely responsible for furnishing, and requiring its employees and customers to use all safety devices, guards and safe operating procedures required by law and/or as set forth in manuals and instruction sheets furnished by Seller. Buyer is responsible for consulting all operator's manuals, ANSI or comparable safety standards, OSHA regulations and other sources of safety standards and regulations applicable to the use and operation of the Goods.

Remedies. Each of the rights and remedies of Seller under this Agreement is cumulative and in addition to any other or further remedies provided under this Agreement or at law or equity.

CINCINNATI PRECISION MACHINERY 513-860-4133

Attorney's Fees. In the event legal action is necessary to recover monies due from Buyer or to enforce any provision of this Agreement, Buyer shall be liable to Seller for all costs and expenses associated therewith, including Seller's actual attorneys' fees and costs.

Governing Law/Venue. This Agreement shall be construed and governed under the laws of the State of Wisconsin, without application of conflict of law principles. Each party agrees that all actions or proceedings arising out of or in connection with this Agreement shall be commenced, tried, and litigated only in the state courts sitting in Manitowoc County, Wisconsin or the U.S. Federal Court for the Eastern District of Wisconsin. Each party waives any right it may have to assert the doctrine of "forum non conveniens" or to object to venue to the extent that any proceeding is brought in accordance with this section. Each party consents to and waives any objection to the exercise of personal jurisdiction over it by courts described in this section. EACH PARTY WAIVES TO THE FULLEST EXTENT PERMITTED BY APPLICABLE LAW THE RIGHT TO A TRIAL BY JURY.

CINCINNATI PRECISION MACHINERY 513-860-4033

"CAUTION"–HYDRAULIC OIL SPECIFICATION

1. USE HYDRAULIC OIL #68 SHELL BRAND or EQUIV ALENT SPECIFICATIONS OF OTHER BRANDS.

2. FILL HYDRAULIC OIL INTO HYDRAULIC TANK UP TO 90% FULL.

DO NOT RELY ON OIL GAUGE WHICH SOMETIMES GIVE INCORRECT OIL-LEVEL INDICATION. **DOUBLE-CHECK TO OIL TANK AND MAKE SURE OIL TANK IS, AT LEAST, 90% FULL.**

SHORTAGE OF HYDRAULIC OIL WILL CAUSE HYDRAULIC SYSTEM/PUMP BREAK-DOWN AND DAMAGE TO MAJOR MECHANICAL PARTS BECAUSE OF OVERHEAT.

3. CHANGE HYDRAULIC OIL EVERY 6 MONTHS.

CINCINNATI PRECISION MACHINERY 513-860-4133

CONTENTS

1. OPERATIONAL SAFETY

2. MACHINE GENERAL INFORMATION
   1. MACHINE MAIN PARTS
   2. MACHINE SPECIFCATIONS

3. UNPACKING AND TRANSPORTATION
   1. UNPACKING AND THE CORRECT WAY TO TRANSPORT THIS MACHINE
   2. FOUNDATION AND INSTALLATION
   3. MACHINE POWER CABLES` CONNECTION
   4. HYDRAULIC OIL SPECIFICATION AND FILLING

4. OPERATION
   1. CONTROL EXPLANATION AND FUNCTION
   2. FOOTSWITCH CONTROL AND EXPLANATION
   3. OPERATION PROCEDURE
   4. MACHINING PROCEDURE

5. PARTS LISTS

6. ELECTRICAL DIAGRAMS

7. HYDRAULIC DIAGRAMS

CINCINNATI PRECISION MACHINERY 513-860-4133

1. OPERATIONAL SAFETY

1-1 SOME IMPORTANT SAFETY INFORMATIONS :

A). PROHIBITATION :

-THE OPERATOR WITHOUT TRAINNIG AND BEING AUTHORISED IS PROHIBITED TO OPERATR THIS MACHINE.

MODIFICATION TO CHANGE THE FUNCTION AND SPECIFICATION OF THIS MACHINE IS PROHIBITED.

THE OPERATIION BEFORE READING THROUGH THIS INSTRUCTION MANUAL IS PROHIBITED.

B). AIR BONE NOISE LEVEL :

-THE AIR ONE NOISELEVEL DURING OPERATION IS ABOUT 70~75 dB(A).

C). THE LIGHTING :

-THE APPROPRIATE LIGHTING HAS TO BE PROVIDED ACCORDING TO THE LOCAL REGULATION.

THE MINIMUM LIGHTING FOR THIS MACHINE IS 300 LUX. IF NO ANY LOCAL REGULATION IS FOUND.

D). THE ENVIRONMENT :

1. AMBIENT AIR TEMPERATURE : +5°C~55°C IN FREE AIR, AND THE AVERAGE AMBIENT AIR TEMPERATURE OVER A PERIOD OF 24 HOURS SHALL NOT EXCEED+50°C.
2. HUMIDITY : 30%~95%.
3. ALTITUDE : UP TO 1000M ABOVE MEAN SEA LEVEL.
4. TRANSPORTATION & STORAGE CONDITION : -25°~55°C. AND FOR SHORT PERIODS NOT EXCEEDING 24 HOURS AT UP TO +70°C.

CINCINNATI PRECISION MACHINERY 513-860-4133

1-2 SAFETY RULES DURING AND/OR BEFORE OPERATION

A). BE SURE THE INSTRUCTION MANUAL AND THE PROGRAMMING MANUAL ARE FULLY UNDERSTOOD.

B). USE SAFETY PROTECTIVE EQUIPMENT SUCH AS SAFETY SHOES, GOGGLES. CLOTHES, ETC.

C). WORK TABLE NEAR THE MACHINE MUST BE STRONG ENOUGH TO PREVENT ACIDENTS AND BE SURE ARTICLES WILL NEVER SLIP OFF THE TABLE SURFACE TO INTERFERE THE ACT OF MACHINE.

D). TOOLS AND ANY UNNECESSARY ITEMS ARE NOT ALLOWED TO BE PLACED ON THE MACHINE COVER, MOVING PARTS. AND SIMILAR PLACES.

E). BEFORE OPERATING SWITCHES. ALWAYS CHECK IF THE SWITCHES ARE THE RIGHT ONES AND NEVER TOUCH A SWITCH ACCIDENTALLY OR IT MAY CAUSE MALFUNCTIONS OR DANGER.

F). DO NOT OPERATE SWTTCHES WTTH GLOVES ON. THIS COULD CAUSE MALFUNCTIONS OR EVEN DANGER.

G). DO NOT TOUCH A SWITCH WITH WETHANDS. OR AN ELECTRIC SHOCK WILL OCCUR.

H). IF JOB IS TO BE DONE BY TWO OR MORE OPERATORS. THE SIGNAL OF EACH MUST BE WELL KNOWN WHAT ACTION WILL BE DONE AND WHAT DANGER MAY OCCUR. THE NEXT STEP SHOULD NOT BE TAKEN.

I). TOOLS SHOULD BE CONFORMED TO THE MACHINES SPECIFICATIONS. SUCH AS DIMENSIONS. WEIGHT AND TYPES.

J). GRIP WORKPIECES SECURELY TO AVOID THE MOVEMENT OR VIBRATION BETWEEN WORKPIECE AND CUTTING TOOL OR IT MAY DAMAGE PERSONNEL. MACHINE OR WORKPIECE.

K). NEVER TOUCH TOOL AND CUTTING CHIPS WITH BARE HANDS.

L). NEVER TRY TO CONTACT A TURNING WORKPIECE OR PARTS IN ANY WAY.

M). STOP THE MACHINE BEFORE REPLACING A WORKPIECE AND PROVIDE PLENTY OF DISTANCE BETWEEN WORKIECE AND TOOL TO AVOID IMPACT BETWEEN WORKPIECE AND TOOL.

CINCINNATI PRECISION MACHINERY 513-860-4133

1-3 SAFETY FOR THE ELECTRICAL CONNECTION/DISCONNECTION

A). ELECTRICAL CONNECTION :

1. A CABLE WITH FOUR WIRES EQUIPPED TO CONNECT YOUR MACHINE INTO THE 3 PHASE POWER SUPPLY. THIS MACHINE IS EQUIPPED WITH A HAND OPERATED DISCONNECTIONG DEVICE, WHICH IS IN COMPLIANCE WITH SUBCLAUSE 5.3 OF EN 60604, ON THE DOOR OF CONTROL BOX.
2. FOR THE PROTECTION OF CONTROL DEVICE, WE RECOMMEND THE OPERATOR TO SUPPLY A FUSE WITH APPROPRIATE CURRENT RATING. AND THE TOTAL LENGTH BETWEEN FUSE AND CONNECTION TERMINAL SHALL NOT EXCEED 1.5M.
3. THE POWER SUPPLY SYSTEM IS TN SYSTEM.
4. THE EXACT POWER SOURCE VOLTAGE. FREQUENCY, AND NUMBER OF PHASE SHALL BE CHECKED ACCORDING TO THE INSTALLATION DIAGRAM AND CIRCUIT DIAGRAM.
5. THE CORRECT ROTATING DIRECTION OF MOTOR(S) SHOULD BE CHECKD AFTER CONNECTING.

B). ELECTRICAL DISCONNECTION :

1. THE DISCONNECTION IS CARRIED OUT BY HAND-OPERATED DISCONNECTING DEVICE, WHICH IS ON THE DOOR OF CONTROL BOX AS AN OPTION OR CONNECTED BEFORE THE POWER SOURCE.
2. BE SURE TO DISCONNECT THIS MACHINE FROM POWER SOURCE, WHEN YOU WANT TO STOP THE JOB. MAINTENANCE, AND ADJUSTMENT.

C). GROUNDING

THE GROUNDING OF THIS MODEL IS CARRIED OUT BY CONNECTING THE YELLOW/GREEN TERMINAL OF SUPPLY CABLE TO THE GROUNDING TERMINAL OF POWER SOURCE. BE SURE TO GROUND YOUR MACHINE BEFORE CONNECTING MACHINE TO POWER SOURCE IN ANY SITUATION.

WARNING!

DO NOT DISCONNECT GROUNDING TERMINAL BEFORE DISCONNECTING POWER SOURCE.

D). WHERE A PORTION OF THE MACHINE AND ITS ASSOCIATED EQUIPMENT IS CHANGED OR MODIFIED. THE FOLLOWING RETEST SHALL BE CARRIED OUT IN ACCORDANCE WITH CLAUSE 20 OF EN60204-1 :

-CONTINUITY OF THE PROTECTIVE BONDING CIRCUIT(SUBCLAUSE20.2)

-INSULATION RESISTANCE TESTS. (SUBCLAUSE20.3).

-VOLTAGE TESTS. (SUBCLAUSE20.4).

-FUNCTIONAL TESTS.

CINCINNATI PRECISION MACHINERY 513-860-4133

1-4 DESCRIPTION FOR THE SAFETY FUNCTION OF THIS MACHINE

THE FOLLOWING SAFETY FUNCTIONS ARE EQUPPED WITH THIS MACHINE BE SURE TO CHECK AND ENSURE THE CORRECT FUNCTIION BEFORE YOU START TO OPERATE YOUR MACHINE.

1. **THE HAND-OPERATED POWER DISCONNECTION DEVICE :**

   IT IS CONSTRUCTED TO DISCONNECT MACHINE FROM POWER SOURCE WHEN THE OPERATOR INTEND TO STOP OPERATION FOR MAINTENANCE, REPAIR, AND/OR WHILE THE END OF WORK. THE CORRECTION IS THAT THE DOOR OF CONTROL CABINET COULD BE OPEN ONLY WHEN THIS SWITCH OF THIS DEVICE IS SWITCHED OFF. AND AFTER THIS DEVICE IS SWITCHED OFF. IF IS POSSIBLE TO BE LOCKED WITH SOME APPROPRIATE LOCKING. AS SOON AS THIS DEVICE IS SWITCHED OFF. NO ANY OPERATION IS POSSIBLE AND THERE WOULD BE NO ANY ELECTRICITY ON THE CONTROL CIRCUIT EXCEPT THE WIRING BEFORE THIS DEVICE.

2. **THE EMERGENCY STOP DEVICE :**

   IT IS CONSTRUCTED TO STOP MACHINE AS FAST AS POSSIBLE IN EMERGENCY SITUATION. AS SOON AS THIS DEVICE IS ACTUATED. ANY MOVEMENT WILL BE STOPPED IN A SHORT TIME. AFTER THE ACTUATION OF EMERGENCY BUTTON. THE FURTHER OPERATION IS POSSIBLE ONLY WHEN THIS BUTTON IS DISENGAGED AND THE RESTART KEY IS ACTUATED. BE SURE TO CHECK THAT MACHINE ACTION WILL STOP IMMEDIATELY AFTER THIS BUTTON IS PUSHED AND WILL NOT CAUSE ANY ACTION WHEN THIS BUTTON IS DISENGAGED.

3. **ROLLING STOP SAFETY DEVICE.**

   A SAFETY STEEL CABLE, WHICH IS INCOOPERATED WITH LIMIT SWITCH, IS EQUIPPED ALL-AROUND THE MACHINE. THE CORRECT FUCTION IS THAT ROLLER(S) WILL BE STOPPED IMMEDIATELY AFTER THIS CABLE IS PULLED.
   TO CONTROL ROLLING FUNCTION.

CINCINNATI PRECISION MACHINERY 513-860-4138

1-5 SAFETY INSPECTION

TO ENSURE SAFETY, IT IS NECESSARY TO DO THE FOLLOWING INSPECTIONS FOR THIS MACHINE AFTER INSTALLATION.

1. CHECK IF THE TRANSPORTATION PROCEDURE HAS INFLUENCED THE ACCURACY AND FUNCTIONS OF THE MACHINE.
2. CHECK IF THE FOUNDATION OF THE MACHINE IS APPROPRIATE.
3. CHECK IF THE FACTORY HAS THE CORRECT THUNDER-PREVENTING SYSTEM UNDER 25. THE MACHINES MAIN POWER SWITCH SHOULD AISO HAVE EARTH WIRING CONNECTED.
4. USE THE MULTITESTER TO CHECK IF THE THREE-PHASE VOLTAGE IS STABLE AND PHASES ARE IN ORDER.
5. CHECK IF MOTOR ROTATION IS NORMAL.
6. CHECK IF THE CONTROL PANEL FUNCTION AND PUSH BUTTON ARE FUNCTIONING.
7. CHECK EMERGENCY STOP FUNCTION.
8. CHECK IF SAFETY PROTECTION ACCESSORIES ARE FUNCTIONING WELL.
9. CHECK IF OTHER ACCESSORIES. INCLUDING HYDRAULIC AND PNEUMATIC ONES, ARE CONNECTED WELL.
10. CHECK IF THE OIL THE AMOUNT INDICATOR NORMAI.
11. MAKE SURE NO OBSTACLE IS AROUND MACHINE AND CONTROL SYSTEM.
12. MAKE SURE NO PERSONNEL IS IN DANGEROUS AREA.

CINCINNATI PRECISION MACHINERY 513-860-4133

2. GENERAL INFORMATION ABOUT THIS MACHINE

2-1. MACHINE MAIN PARTS

2-1-1. FRONT VIEW

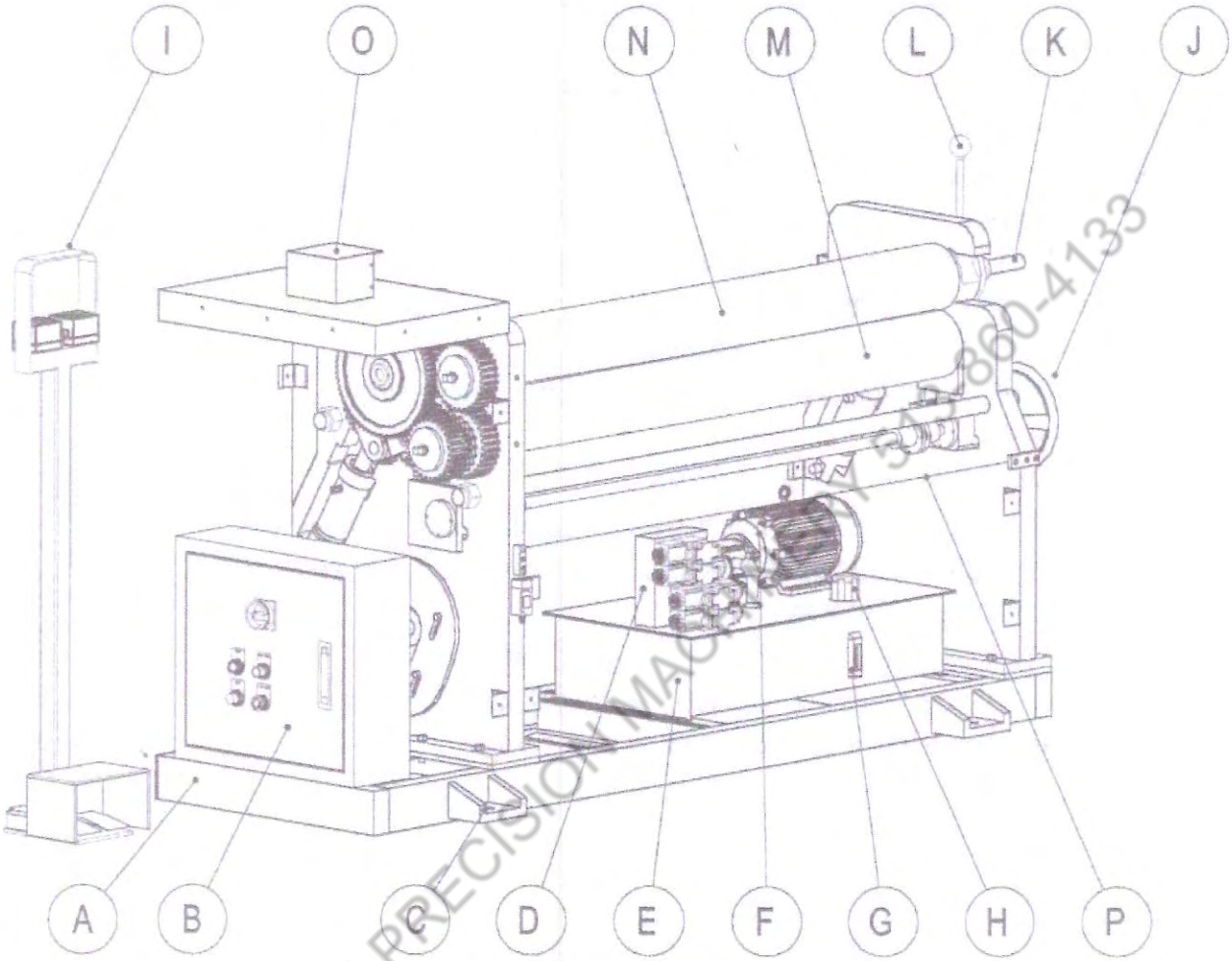

NO.	名　　稱	NO.	名　　稱
A	MACHINE BASE	J	BOTTOM ROLL ADJUSTING HANDWHEEL
B	ELECTRICAL CABINET	K	UPPER ROLL SLIDING HANDLE
C	FOUNDATION / LEVELLING BASE	L	UPPER ROLL LOCK HANDLE
D	HYDRAULIC CIRCUITS PLATE	M	BOTTOM ROLL
E	HYDRAULIC OIL TANK	N	UPPER ROLL
F	MAIN MOTOR	O	PINCH ROLL POSITION INDICATOR
G	OIL GAUGE	P	EMERGENCY STOP CABLE
H	OIL FILLING STATION	Q	
I	REMOTE CONTROLLER	R	

CINCINNATI PRECISION MACHINERY 317-860-4133

2-1-2. REAR VIEW

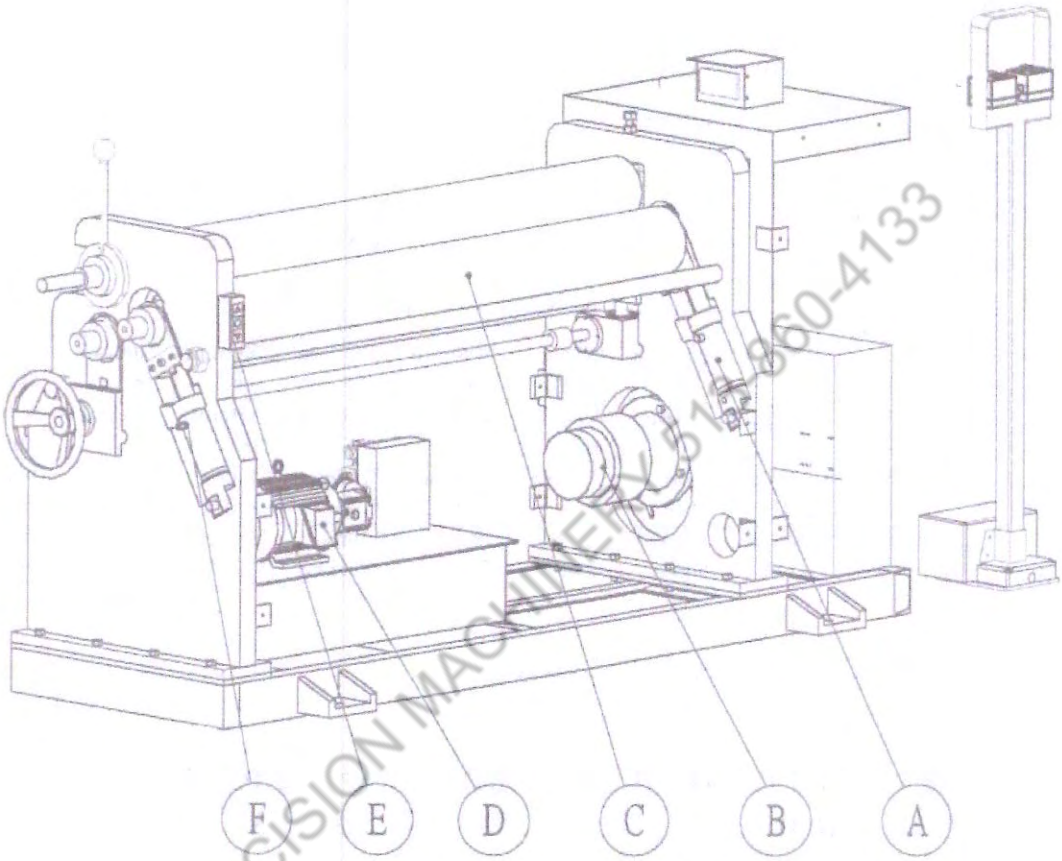

NO.	SPECIFICATION	NO.	SPECIFICATION
A	HYDRAULIC CYLINDER	F	AIR-RELIEF VALVE
B	REDUCING GEAR MOTOR	G	
C	PINCH ROLL	H	
D	MAIN MOTOR	I	
E	PINCH ROLL CONTROL BOX	J	

CINCINNATI PRECISION MACHINERY 513-860-4133

2-2. MACHINE INFORMATIONS

2-2-1. MODELS AND SPECIFICATIONS

MODEL	R-0440H	R-0535H	R-0625H	R-0465H	R-0545H	R-0640H	R-0480H	R-0570H	R-0650H
CAPACITY LIGTH	1320mm (52″)	1320mm (52″)	1320mm (52″)	1320mm (52″)	1320mm (52″)	1320mm (52″)	1320mm (52″)	1320mm (52″)	1320mm (52″)
MILD STEEL	4.5mm	4.5mm	4.5mm	4.5mm	4.5mm	4.5mm	4.5mm	4.5mm	4.5mm
ROLL DIAMETER	120mm (52″)			150mm (52″)			180mm (52″)		
HYDRAULIC POWERED PINCH ADJUSTMENT	STANDARD								
MOTOR(HP)	2			3			5		
SHPPING CRATE SIZE mm (inch)	2050mm (80″)	2350mm (80″)	2850mm (80″)	2100mm (80″)	2400mm (80″)	2900mm (80″)	2200mm (80″)	2500mm (80″)	3000mm (80″)
	750mm (102″)	750mm (102″)	750mm (102″ ")	800mm (102″)	800mm (102″)	800mm (102″)	900mm (102″)	900mm (102″)	900mm (102″)
	1250mm (120″)	1250mm (120″)	1250mm (120″)	1300mm (120″)	1300mm (120″)	1300mm (120″)	1400mm (120″)	1400mm (120″)	1400mm (120″)
SHIPPING WEIGH	1700kgs (946lbs)	1950kgs (946lbs)	2250kgs (946lbs)	1900kgs (946lbs)	2200kgs (946lbs)	2550kgs (946lbs)	2400kgs (946lbs)	2900kgs (946lbs)	3500kgs (946lbs)

2-2-2. STANDARD ACCESSORIES :

1. ALL 3 ROLLS ARE DRIVEN BY HYDRAULIC SYSTEM.
2. PINCH ROLL CYLINDERS ADJUSTMENT SYNCHROUSLY.
3. ALL ROLLS ARE MADE OF TOP-GRADE ALLOY STELL HARDENED UPTO HRC55°
4. RIGID CONSTRUCTION FOR PRECISE & SMOOTH OPERATION, AND LONG LIFE TIME USAGE.
5. THE TOP ROLL CAN BE SWIVELLED OUT FOR EASY REMOVAL OF THE FINISHED WORKPIECE.
6. FOOT SWITCH FOR FORWARD / REVERSE, FITTED WITH A PROTECTIVE HOUSING.

2-2-3. OPTIONAL ACCESSORIES :

1. CONE BENDING ATTACHMENT.
2. SECTION BENDING ATTACHMENT WITH PROFILE ROLLER.

CINCINNATI PRECISION MACHINERY 513-860-4133

3. UNPACKING AND TRANSPORTATION

3-1. UNPACKING :

3-1-1. TOOLS FOR UNPACKING :

1. CRANE
2. SCISSORS
3. OPEN SPANNER
4. LADDER
5. NAIL PULLER
6. ADJUSTABLE SPANNER
7. PNEUMATIC WRENCH
8. HAMMER

3-1-2. UNPACKING :

1. FIRST LOOSEN IRON NAIL ABOVE, THEN LIFT THE TOP COVER.
2. AND LOOSEN IRON AMBIENT NAILS TO TAKE APART BOARD TO AVOID MACHINE DAMAGE BECAUSE OF IMPROPER UNPACK.

CINCINNATI PRECISION MACHINERY 513-860-4133

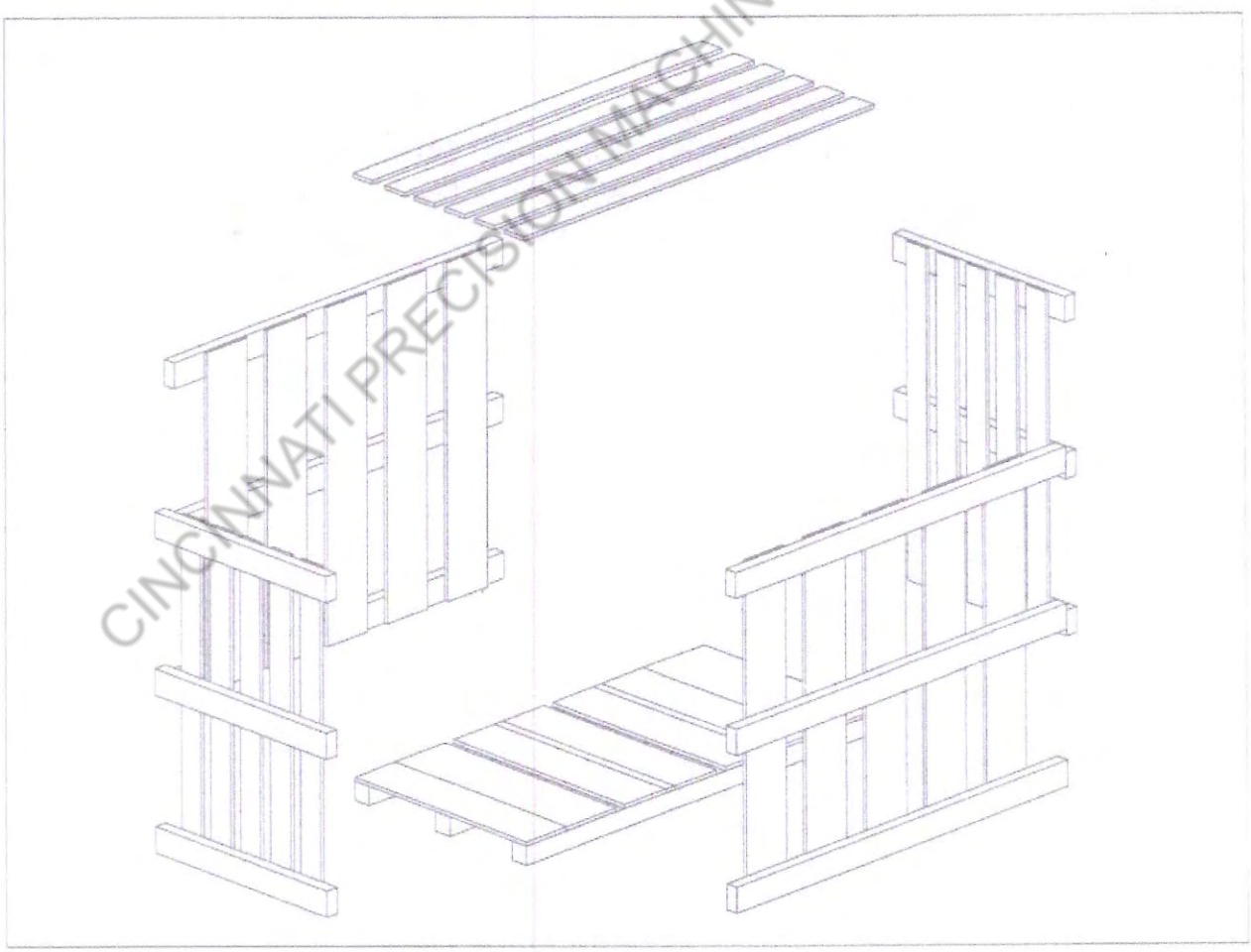

3-1-3. IMPORTANT ITEMS FOR UNPACKING :

A). REMOVAL OF EXTERNAL PACKING

1. BY MEANS OF LADDER, MOVE UP TO THE TOP OF WOODEN CASE, AND USE KNIFE, SCISSORS OR OTHERS TO CUT OFF THE WATERPROOF PLASTIC COVER AROUND THE CASE.
2. USE NAIL PULLER TO REMOVE ALL NAILS AT THE TOP OF COVER OF CASE AND SIDE PLATES.
3. TAKE OUT THE WOODEN BOLTS AT TWO SIDES OF RIDGE OF TOP INSIDE CASE, THEN TAKE APART THE TOP RIDGE. (NOTE : THIS JOB SHOULD BE DONE BY TWO PERSONS AT LEAST IN ORDER TO AVOID ACCIDENT).
4. BY MEANS OF SPANNER OR OTHER TOOLS, REMOVE BOLTS AT THE RIGHT / LEFT SIDES OF THE WOODEN CASE AND THEN TWO SIDES BOARDS.
5. BY THE SAME WAY, REMOVE THE FRONT & REAR WOODEN BOARDS.
6. REMOVE INTERIOR PACKING BAG BY MEANS OF KNIFE, SCISSORS OR OTHER EQUIPMENT TO CUT OFF PACKING PLASTIC BAG AROUND MACHINE.

B). REMOVAL OF PACKING PALLET SKID

1. BY MEANS OF SPANNER, REMOVE BOLTS AND NUTS FROM PALLET SKID, CUT OFF FIXED ROPE OF STANDARD ACCESSORIES OR SPECIAL ACCESSORIES, AND REMOVE THEN OR LIFT AWAY BY GANTRY CRANE.

CINCINNATI PRECISION MACHINERY 513-860-4133

3-1-4. THE CORRECT WAY TO TRANSPORT THIS MACHINE

1. TO LIFT MACHINE BY FORKLIFT TRUCK , SEE FIG. 1 , LIFTING MACHINE FROM THE SIDE OF MACHINE .

NOTE : THE CAPACITY OF OVERHEAD CRANE MUST OVER 10 TONS .

CAPACITY :

OVER HEAD CRANE AND FORKLIFT TRUCK CAPACITY

PLASE REFER TO SPECIFICATION CHART MACHINE WEIGHT

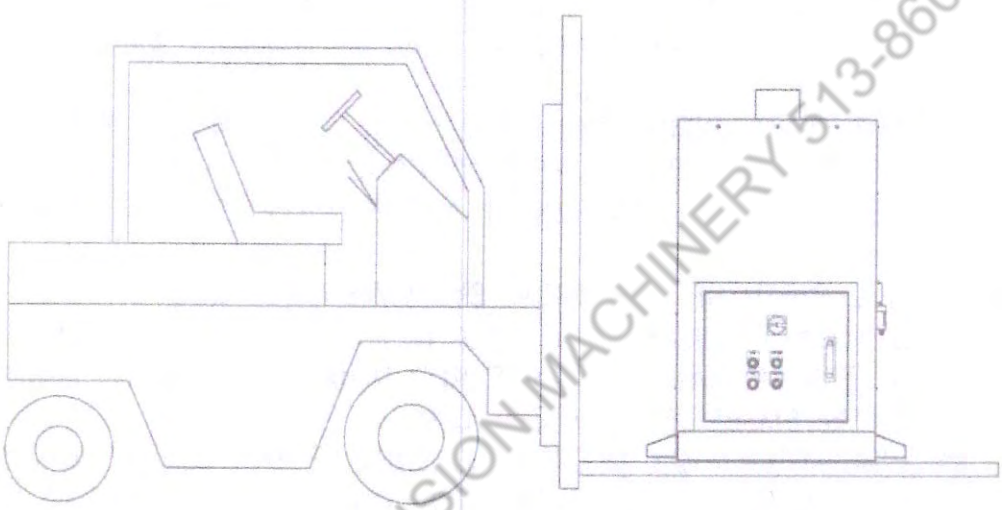

FIG. 1

CINCINNATI PRECISION MACHINERY 513-860-4133

3-2. FOUNDATION AND INSTALLATION :

3-2-1 FOUNDATION

1. WHILE INSTALLING MACHINE, TRY TO AVOID THE FOLLOWING CONDITIONS :
   A). WHERE THE MACHINE IS CLOSE TO HEAT SOURCE.
   B). WHERE THERE IS A VIBRATION SOURCE IN THE SURROUNDING, SUCH AS PRESS, SHEARING ETC.
   C). WHERE THE MACHINE TOOL IS CLOSE TO STRONG ELECTROMAGNETIC ULTRASOUND OR ELECTRIC WELDING MACHINE.
   D). WHERE IT IS CLOSE TO SPILLING OIL, WATER AND CHIPS REACH.
   E). INCLINING OR SLIPPING FOUNDATION.
   F). WHERE THE MACHINE TOOL IS EXPOSED TO THE DIRECT SUNLIGHT.
2. FOUNDATION DRAWING AND REQUIREMENT ARE SHOWN NEXT PAGE.
3. THE DEPTH OF CONCRETE SHOULD BE AS DEEP AS POSSIBLE AND BE SURE THERE IS NO CHANK.
4. FROM CUPS AND HUMPS INSIDE THE FOUNDATION BOLT HOLES SUCH THAT THEY MAY BE SECURELY FIXED TO PRIMARY CONCRETE.
5. REINFORCE STEEL BARS OF DIAMETER OF 19 X 150 mm (PITCH) IN THE FORM OF A TRELLIS.
6. THE PROTECTIVE EARTH OF ELECTRICAL SYSTEM SHOULD COMPLY WITH THE LOCAL REGULATIONS. IF THERE IS NO RELATIVE REGULATIONS, PLEASE MAKE A GROUNDING TERMINAL WITH A COPPER ROD (DIAMETER OF 15mm, LENGTH OF MORE THAN 2m) EMBEDDED IN THE GROUND.
7. INSTALL MACHINE AFTER 7 OR 10 DAYS AT LEASE AFTER FILLING THE GROUND.
8. TO INSTALL THE MACHINE, FILL THE PRIMARY CONCRETE. WHEN IT HAS BEEN DRIED UP LEVEL BTEWEEN 0.002~0.005mm / 100mm. THEN FILL SECONDARY CONCRETE INTO FOUNDATION BOLT HOLES TO FASTEN THEM.
9. USE THE CONCRETE THAT MAY NOT SHRINK TO FILL THE FOUNDATION BOLT HOLES.
10. SPACE FOR INSTALLATION SHOULD CONSIDER NOT ONLY MACHINE`S DIMENSION BUT ALSO ALLOWABLE ZONE FOR MAINTENANCE AND OPERATION AS SHOWN IN FIG.3.
11. ADJUST THE LEVEL ACCURATELY AFTER 7 DAYS.

CINCINNATI PRECISION MACHINERY 513-860-4133

3-2-2. INSTALLATION

A). LEVELLING AND GAUGING MACHINE PRECISELY, WITH PROPER INSTRUMENTS LIKE LEVELLING GAUGE, THICKNESS GAUGE.

B). FILL UP HYDRAULIC OIL TANK WITH CORRECT OIL.
SEE NEXT PAGE "CAUTION".

NOTE: DUE TO SAFETY TRANSPORTATION, THERE IS NO HYDRAULIC OIL INSIDE OIL TANK.

C). CLEANING UP COMPLETELY RUST-PROTECTIVE GREASE FROM MACHINE BODY AND ACCESSORIES. THEN APPLY SMALL MOUNT OF LUBE OIL ON ALL MACHINED SURFACE OF THE MACHINE.

3-3. MACHINE POWER CABLES` CONNECTION:

3-3-1. BUYER/USER MUST PREPARE ONE SET INDEPENDENT POWER SUPPLY UNIT TOGETHER WITH SUITABLE POWER CABLES TO CONNECT TO THE MACHINE.

3-3-2. POWER CABLES SPECIFICATION FOR EACH MODEL MACHINE, PLEASE REFER TO BELOW CHART 2-1.

3-3-3. FOR SAFE PURPOSE, MACHINE MUST CONNECTED WITH GROUND CABLE.

3-3-4. POWER CONNECTING JOB MUST BE PERFORMED BY A QUALIFIED ELECTRICIAN / ENGINEER.

CHART 3-1 POWER CABLES SPECIFICATION

三相電壓	220V	380V	415V	440V	575V	600V
R-0440H 2Hp	AWG 14	AWG 14	AWG 14	AWG 14	AWG 14	AWG 14
R-0535H 2Hp						
R-0625H 2Hp						
R-0465H 3Hp						
R-0545H 3Hp						
R-0640H 3Hp						
R-0480H 5Hp	AWG 12					
R-0570H 5Hp						
R-0650H 5Hp						

CINCINNATI PRECISION MACHINERY (02)860-4133

3-4. HYDRAULIC OIL SPECIFICATION AND FILLING :

"CAUTION"

1. USE HYDRAULIC OIL , #68 SHELL BRAND.

2. FILL HYDRAULICOIL IN TO HYDRAULIC TANK UP TO 90% FULL. AT THIS MOMENT, THE OIL GAUGE IS COMPLETELY FULL.

3. CHANGE HYDRAULIC OIL EVERY6 MONTHS.

CINCINNATI PRECISION MACHINERY 513-860-4133

4. OPERATION

4-1. CONTROL EXPLANATION AND FUNCTION

4-1-1 MAIN POWER SWITCH

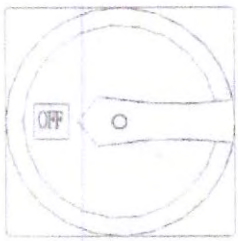

WHEN SWITCHED TO "ON" POSITION ELECTRICAL CABINET ALSO LOCKED

4-1-2. MACHINE POWER INDICATOR

WHEN MACHINE POWER READY, THIS INDICATOR LIGHTS UP.

4-1-3. HYDRAULIC PUMP START BUTTON

WHEN PUMP IS "ON" GREEN LIGHT IS "ON" AT THE SAME TIME

4-1-4. ALARM RESET BUTTON

MACHINE STOP WORKING BECAUSE EMERGENCY STOP CABLE ACTIVATED. RESET (DEPRESS) THIS BUTTON TO RESUME WORKING CONDITION, AFTER CLEAR FAULTY OBJECT(S).

4-1-5. EMERGENCY STOP BUTTON (MACHINE PUMP STOP BUTTON)

AFTER DEPRESSED THIS BUTTON. RED LIGHT IS "ON" AT THE SAME TIME.
RESET THIS BUTTON AS PER ARROW DIRECTION, BEFORE PUSHING "START" BUTTON.

CINCINNATI PRECISION MACHINERY 513-860-4133

4-2. FOOTSWITCH CONTROL AND EXPLANATION

4-2-1 PEDALS

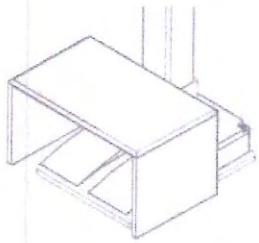

a. LEFT PEDAL, ROLLERS MOVING IN CLOCKWISE DIRECTION.
b. RIGHT PEDAL, ROLLERS MOVING IN CUNTER-CLOCKWISE DIRECTION.

NOTE : DO NOT DEPRESS BOTH PEDALS AT THE SAME TIME.

4-2-2. PINTCH ROLL UP / DOWN BUTTON

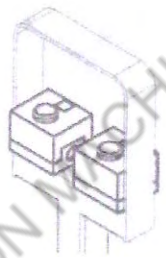

TO MOVE PINCH ROLL UP OR DOWN TO POSITION .

4-2-3. PINCH ROLL REAR-END (SINGLE SIDE) UP / DOWN BUTTON

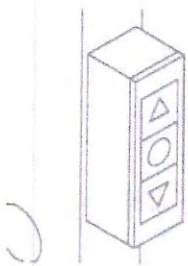

TO ADJUST PINCH ROLL REAR END UP / DOWN POSITION.

NOTE : THIS SWITCH LOCATED ON THE BACKSIDE OF MACHINE SIDE WALL.

CINCINNATI PRECISION MACHINERY 513-860-4433

4-3. OPERATION PROCEDURE :

4-3-1. START MACHINE POWER .

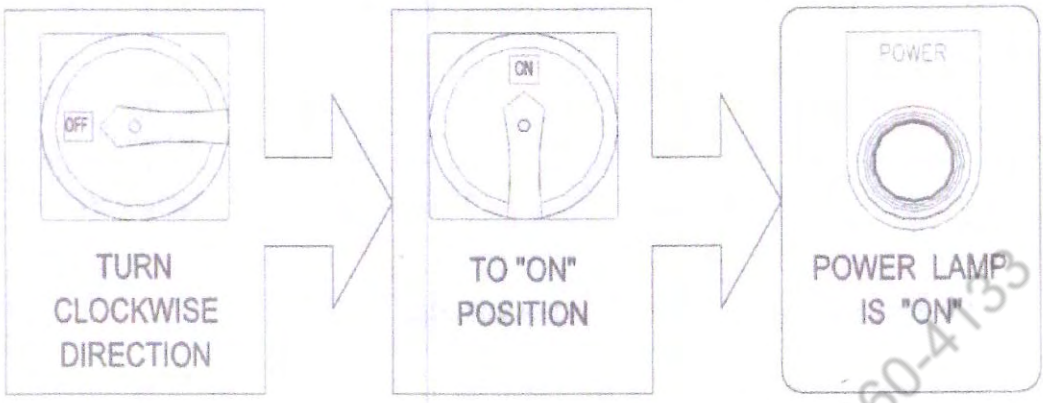

4-3-2. START HYDRAULIC PUMP MOTOR

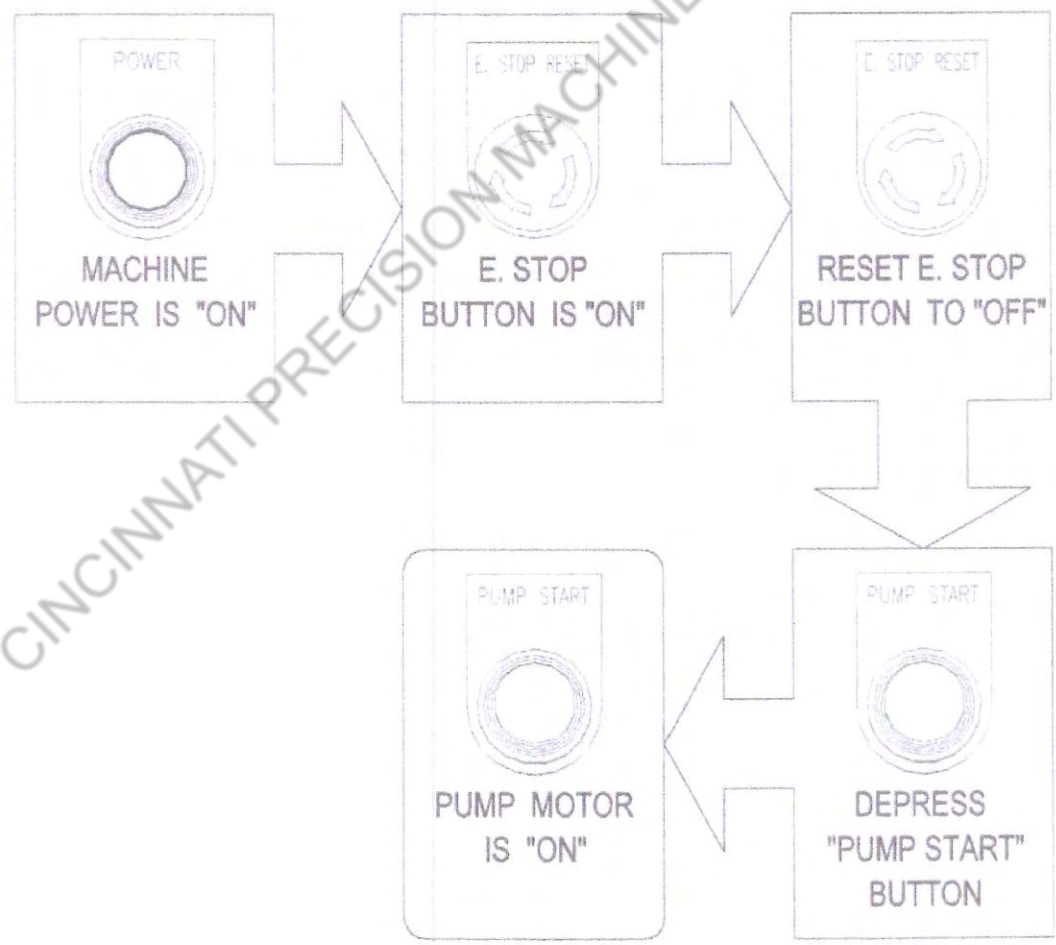

CINCINNATI PRECISION MACHINERY 513-860-4133

4-3-3. SHUT OFF MACHINE POWER

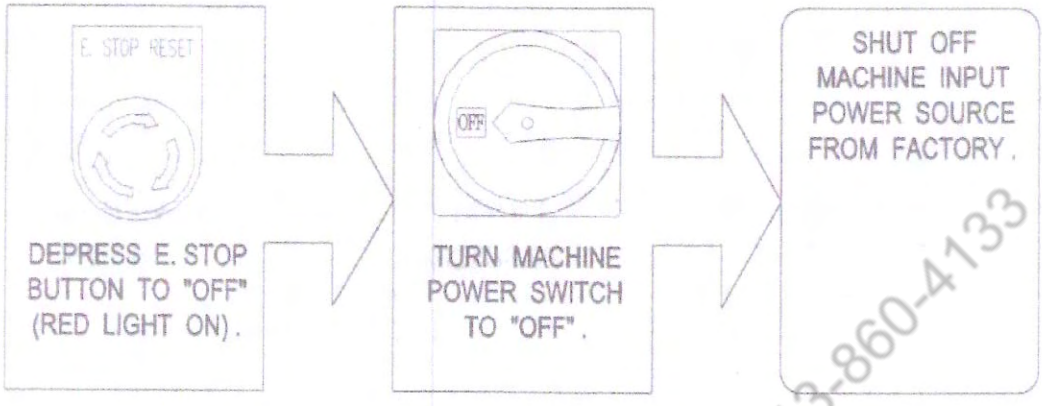

CINCINNATI PRECISION MACHINERY 513-860-4133

4-4. MACHINING PROCEDURE

4-4-1. FEEDING WORKPIECE

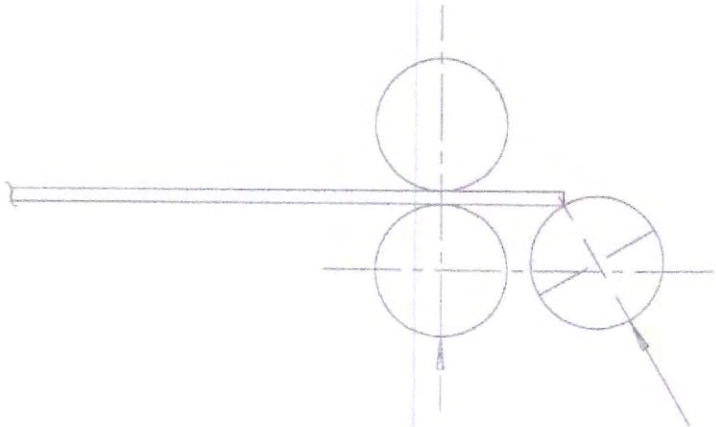

FIG. 4 - 1

1. MAKE SURE WORKPIECE IS CLEAN AND SURFACE FLAWLESS.
2. MOVE UP PINCH ROLL TO PROPER HEIGHT.(FIG. 4-1)
3. INSERT WORKPIECE IN BETWEEN UPPER AND BOTTOM ROLLS, AND LYING ON PINCH ROLL (AS SHOWN FIG. 4-1)
4. ADJUST BOTTOM ROLL BY MANUAL HAND WHEEL SO THAT WORKPIECE IS FIRMLY HELD.
5. MOVE PINCH ROLL POSITION TO THE SAME HEIGHT OF BOTTOM ROLL.
6. DEPRESS FOOTSWITCH PEDAL SO THAT WORKPIECE TRAVELS TO THE OTHER SIDE (AS SHOWN FIG. 4-2)

CINCINNATI PRECISION MACHINERY 513-860-4133

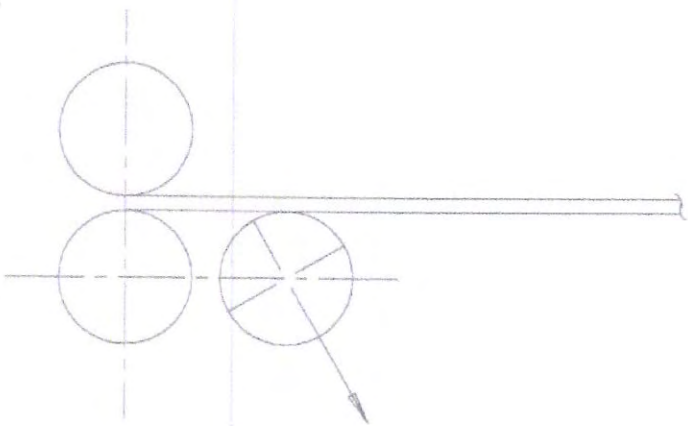

FIG. 4 - 2

4-4-2. FORMING WORKPIECE

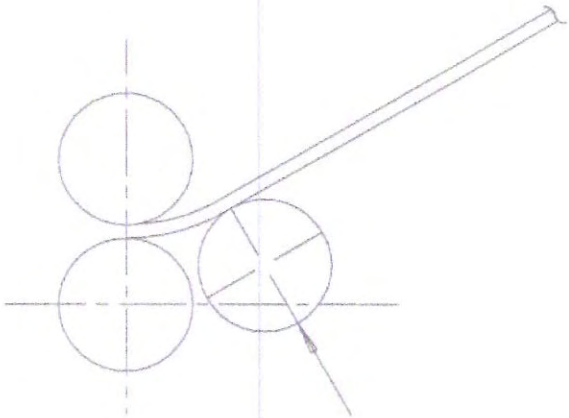

FIG. 4 - 3

1. MOVE UP PINCH ROLL SLOWLY LITTLE BY LITTLE SO THAT WORKPIECE IS FORMING STEP BY STEP. (AS SHOWN FIG. 4-3)
2. DEPRESS FOOT SWITCH PEDALS TO ROLL WORKPIECE FORWARD AND BACKWARD REPEATLY. SO THAT WORKPIECE BECOMING A PERFECT ROUND SHAPE . (AS SHOWN FIG. 4-4 AND 4-5)

CINCINNATI PRECISION MACHINERY 513-860-4133

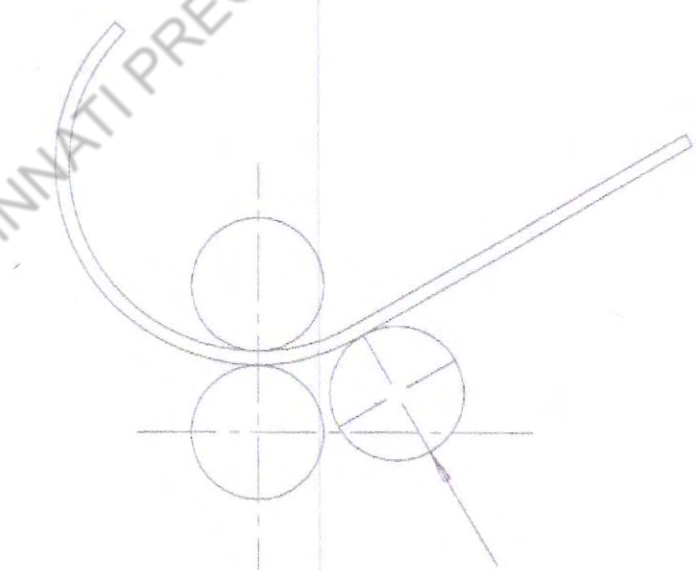

FIG. 4 - 4

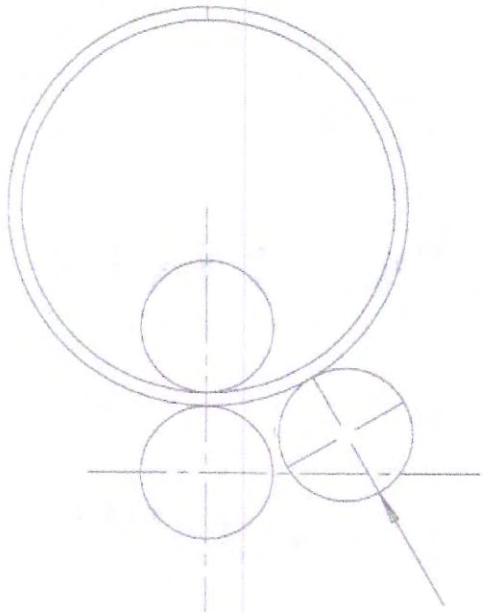

FIG. 4 - 5

4-3. REMOVE FINISHED WORKPIECE

1. MOVE "UPPER ROLL LOCK HANDLE" ANTI-CLOCKWISE TO THE OPENNING POSITION.
2. MOVE UPPER ROLL OUTWARD AWAY FROM MACHINE.
3. TAKE OUT WORKPIECE FROM UPPER ROLL THEN MOVE UPPER ROLL BACK TO LOCK POSITION. (AS SHOWN FIG. 4-6)

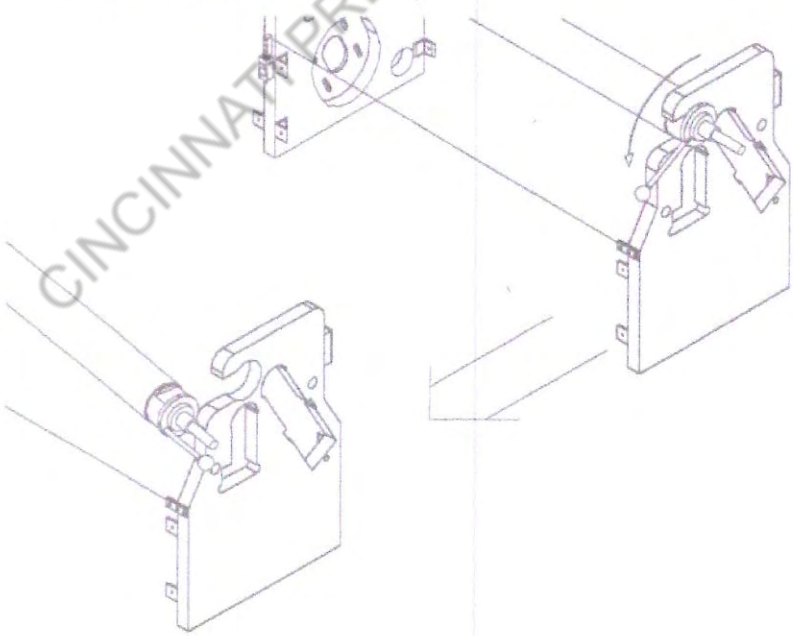

FIG. 4 - 6

CINCINNATI PRECISION MACHINERY 513-860-4133

PARTS LISTS

HYDRAULIC SINGLE PINCH TYPE ROLL MACHINE

CINCINNATI PRECISION MACHINERY 513-860-4133

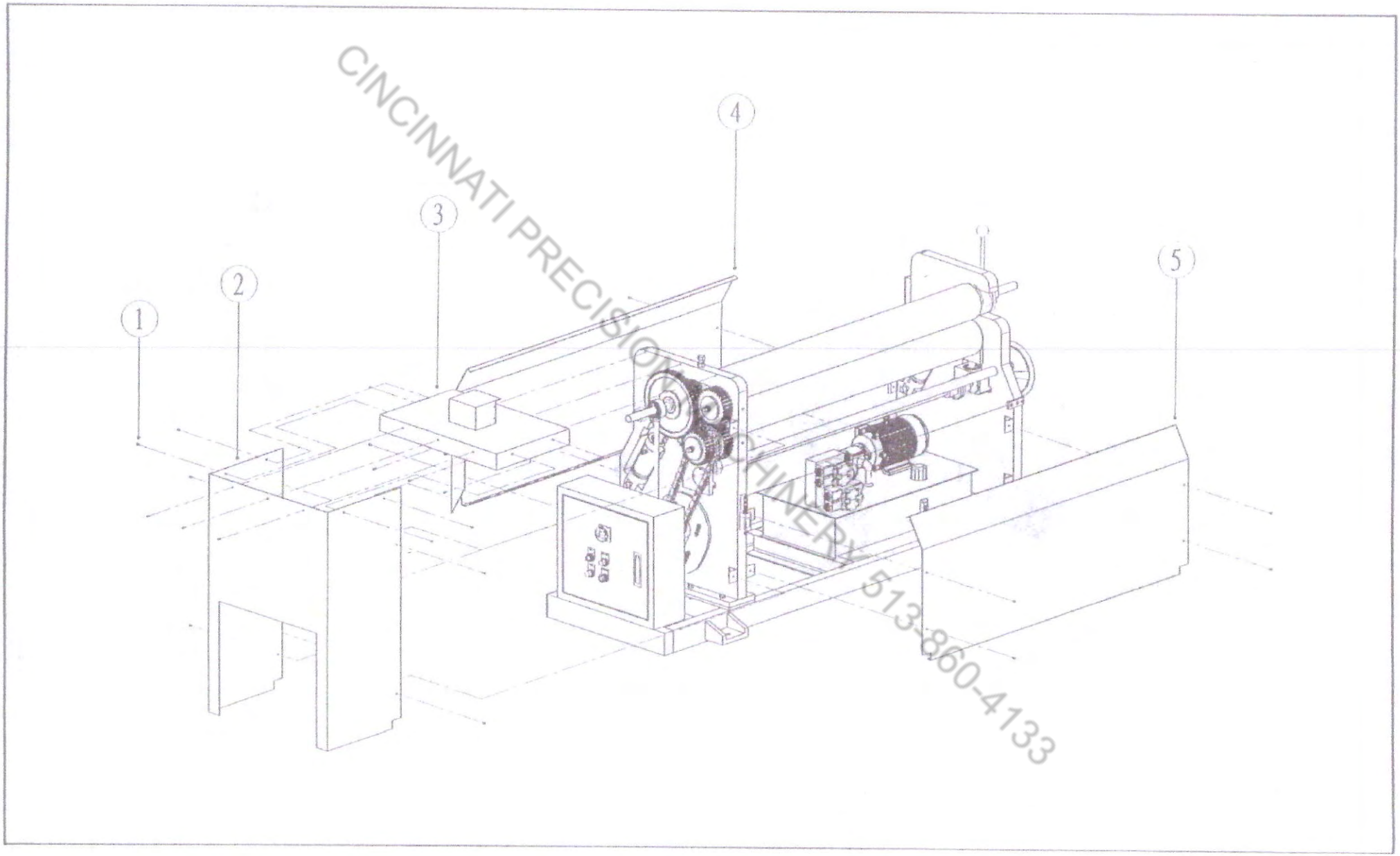

CINCINNATI PRECISION MACHINERY 513-860-4133

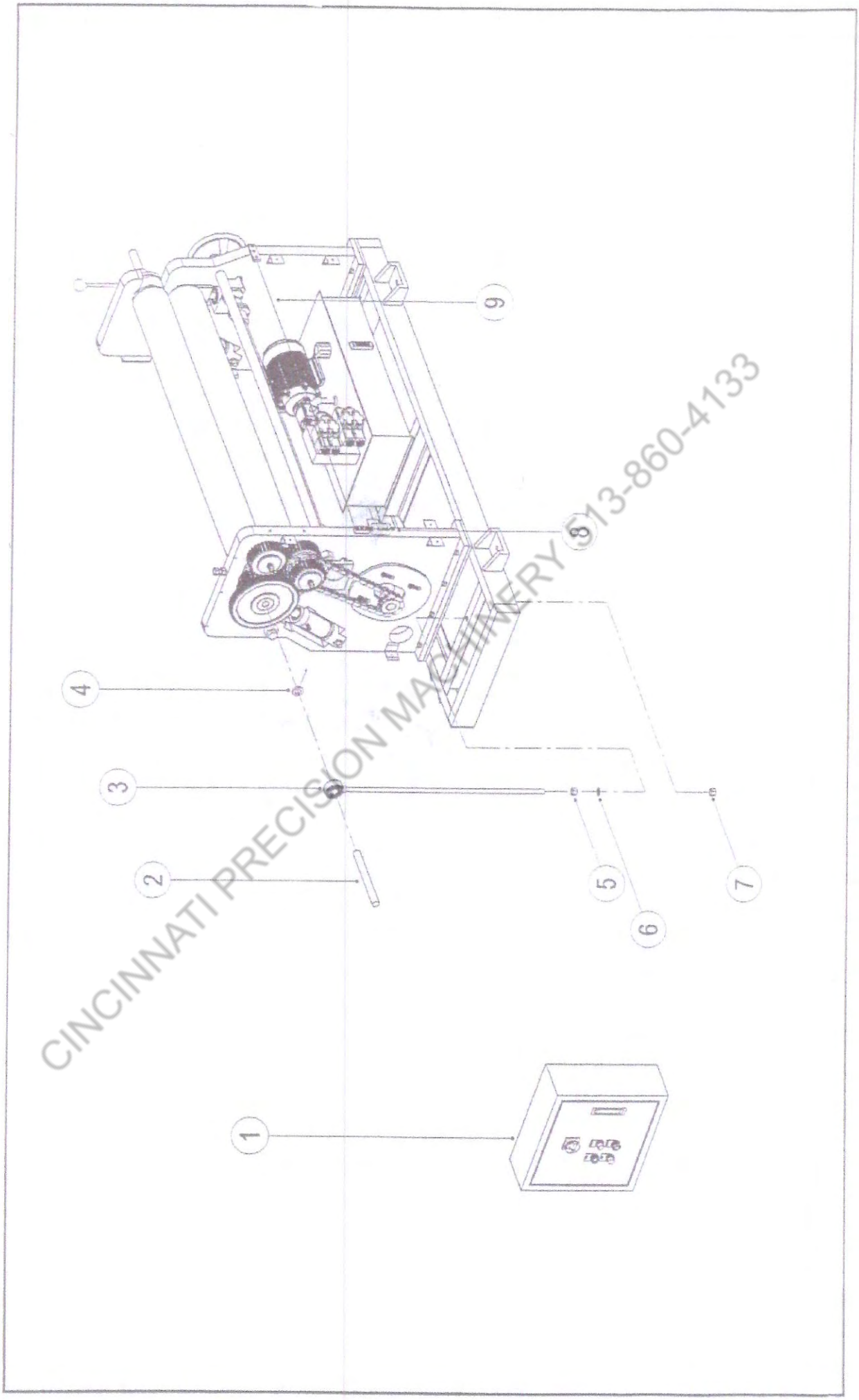

CINCINNATI PRECISION MACHINERY 513-860-4133

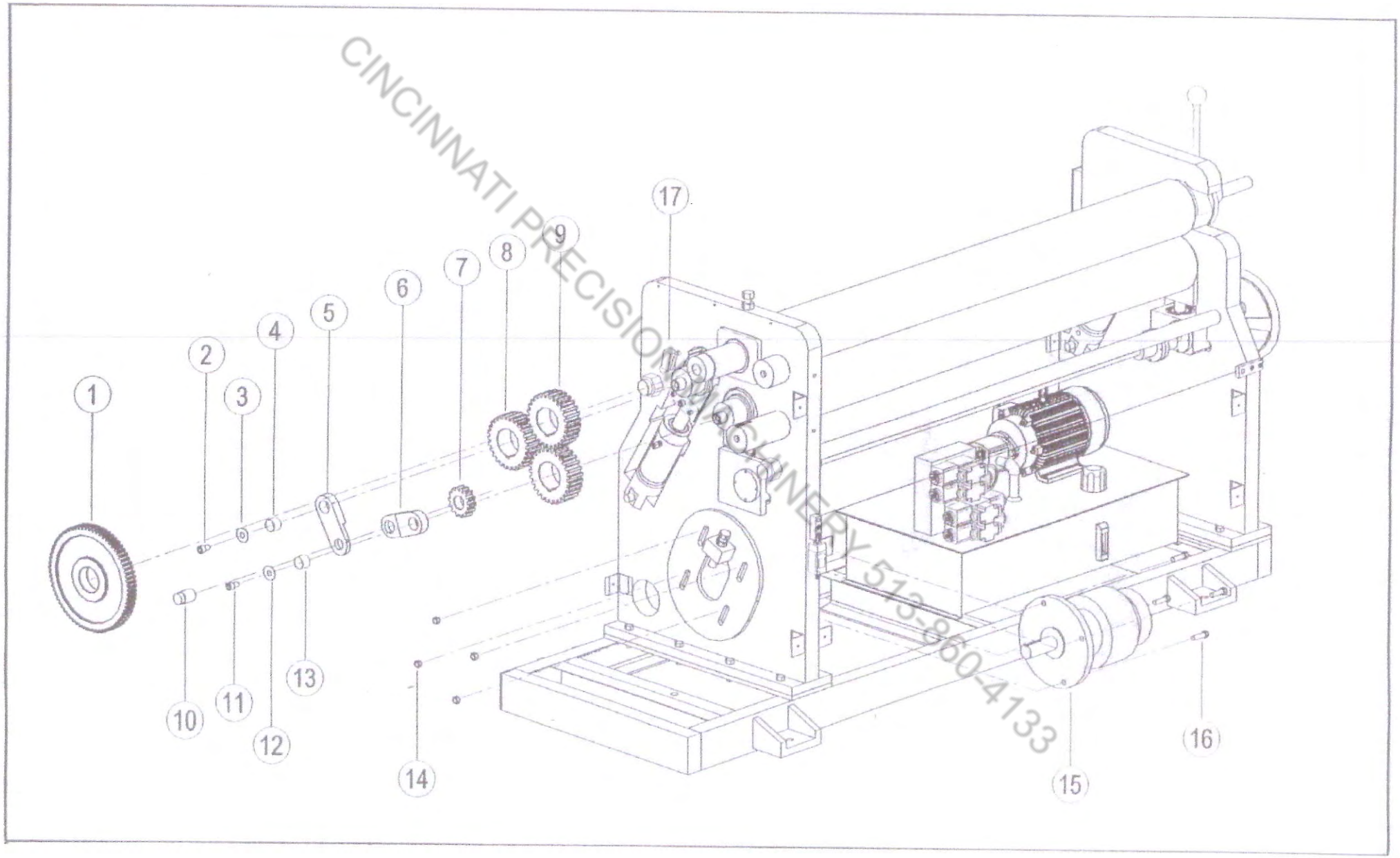

CINCINNATI PRECISION MACHINERY 513-860-4133

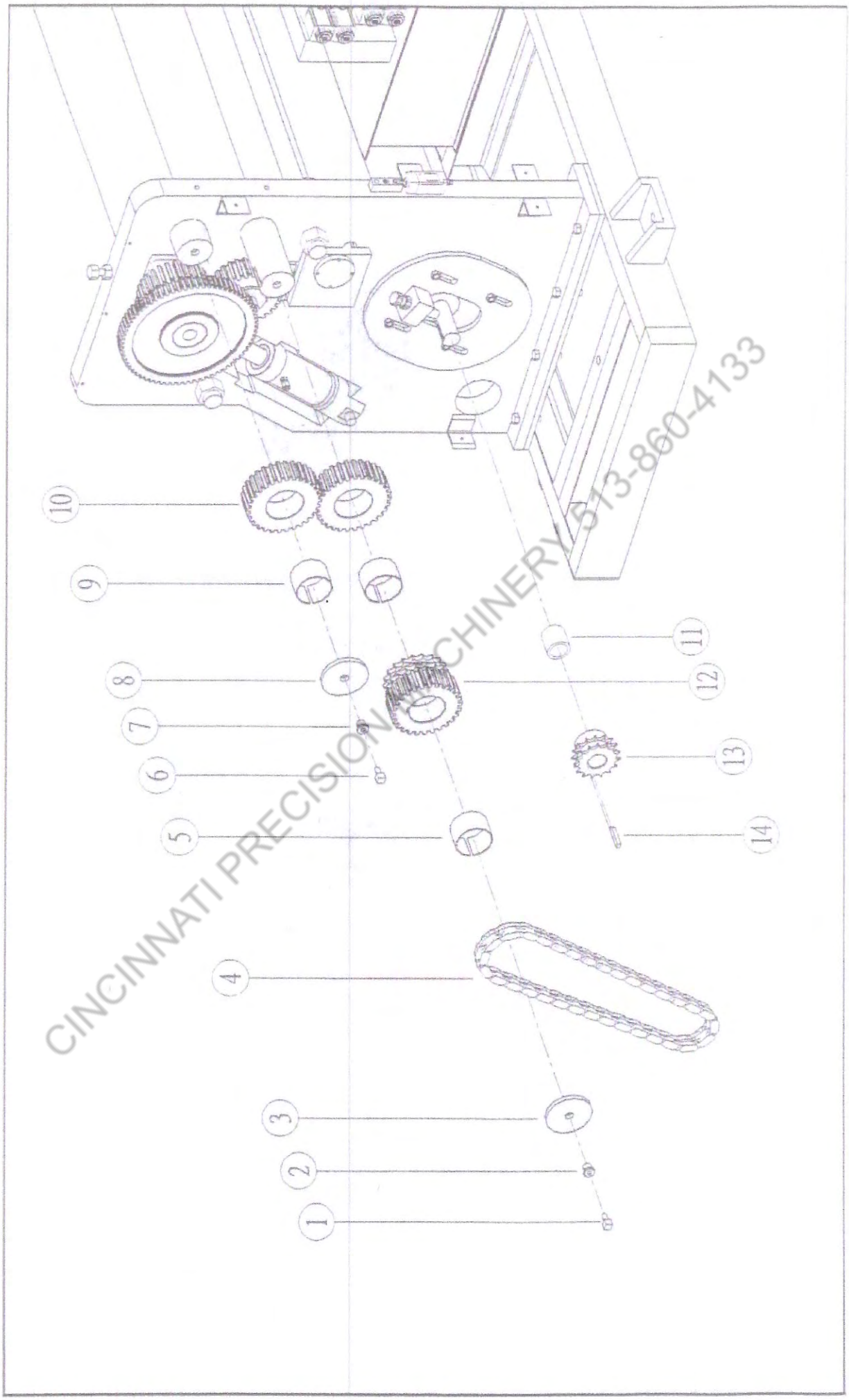

CINCINNATI PRECISION MACHINERY 513-860-4133

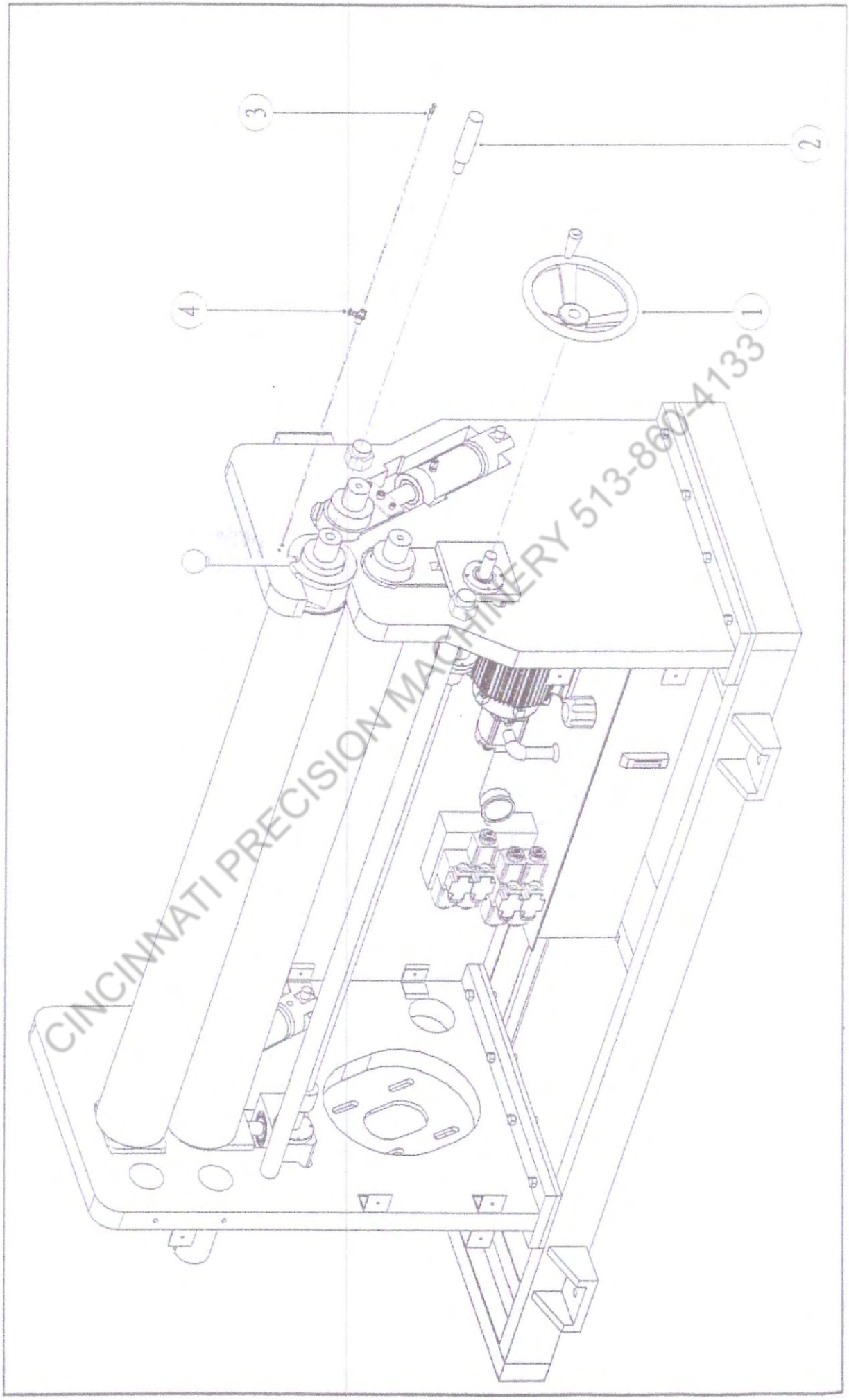

CINCINNATI PRECISION MACHINERY 513-860-4133

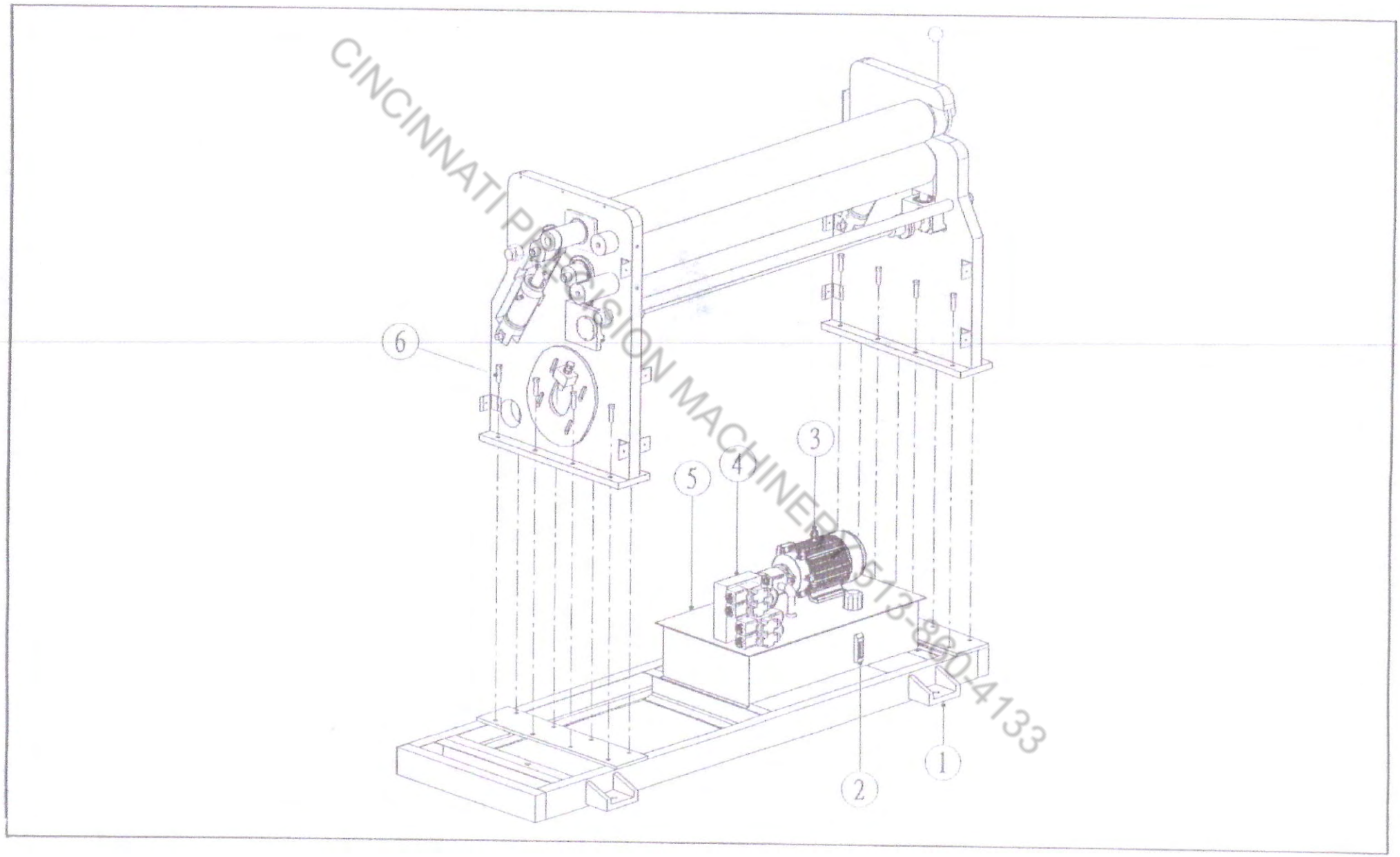

CINCINNATI PRECISION MACHINERY 513-890-4133

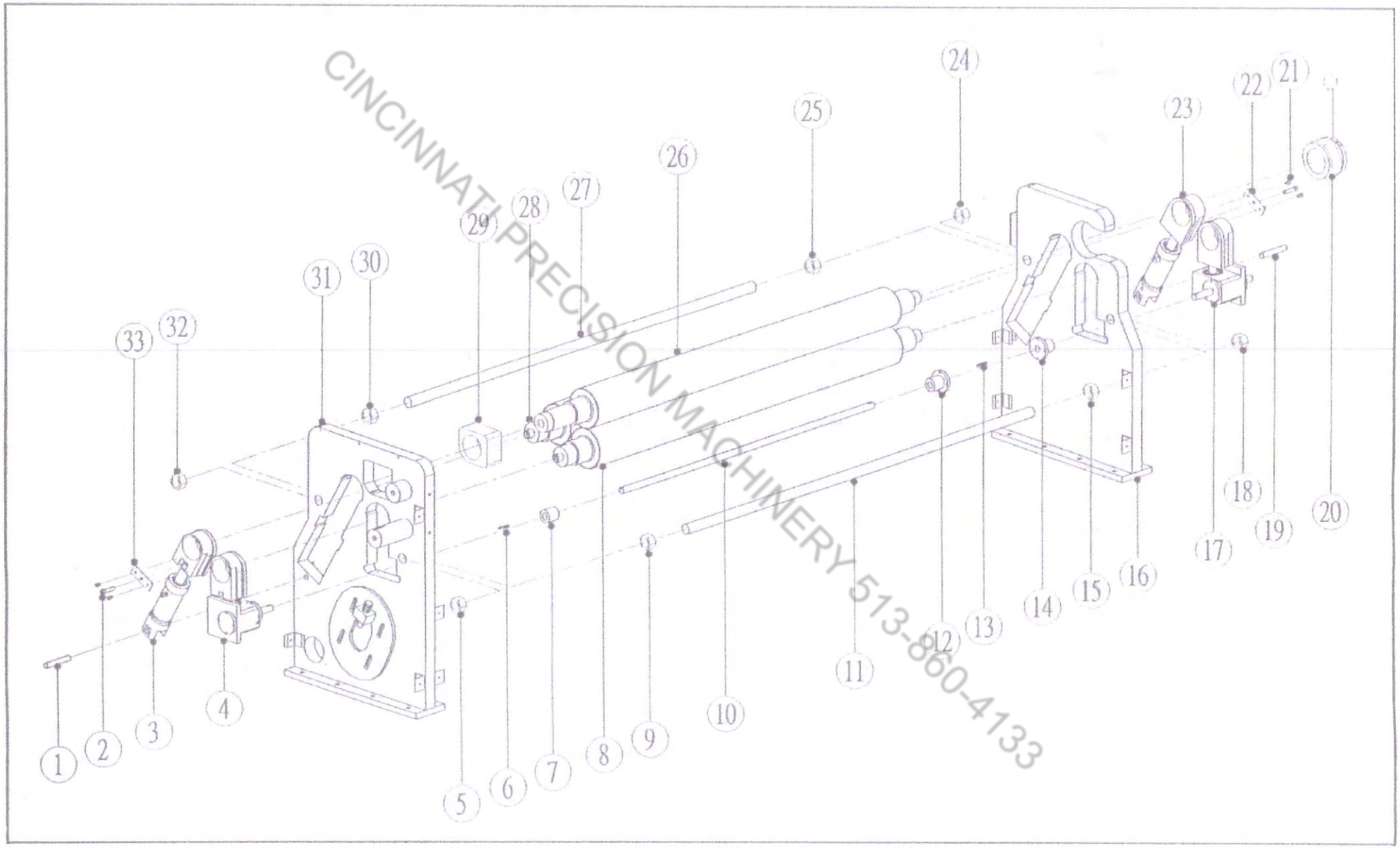

CINCINNATI PRECISION MACHINERY 513-860-4133

ELECTRICAL DIAGRAMS

HYDRAULIC SINGLE PINCH TYPE ROLL MACHINE

CINCINNATI PRECISION MACHINERY 513-860-4133

HYDRAULIC CIRCUITS

HYDRAULIC SINGLE ROLL MACHINE

CINCINNATI PRECISION MACHINERY 513-860-4123

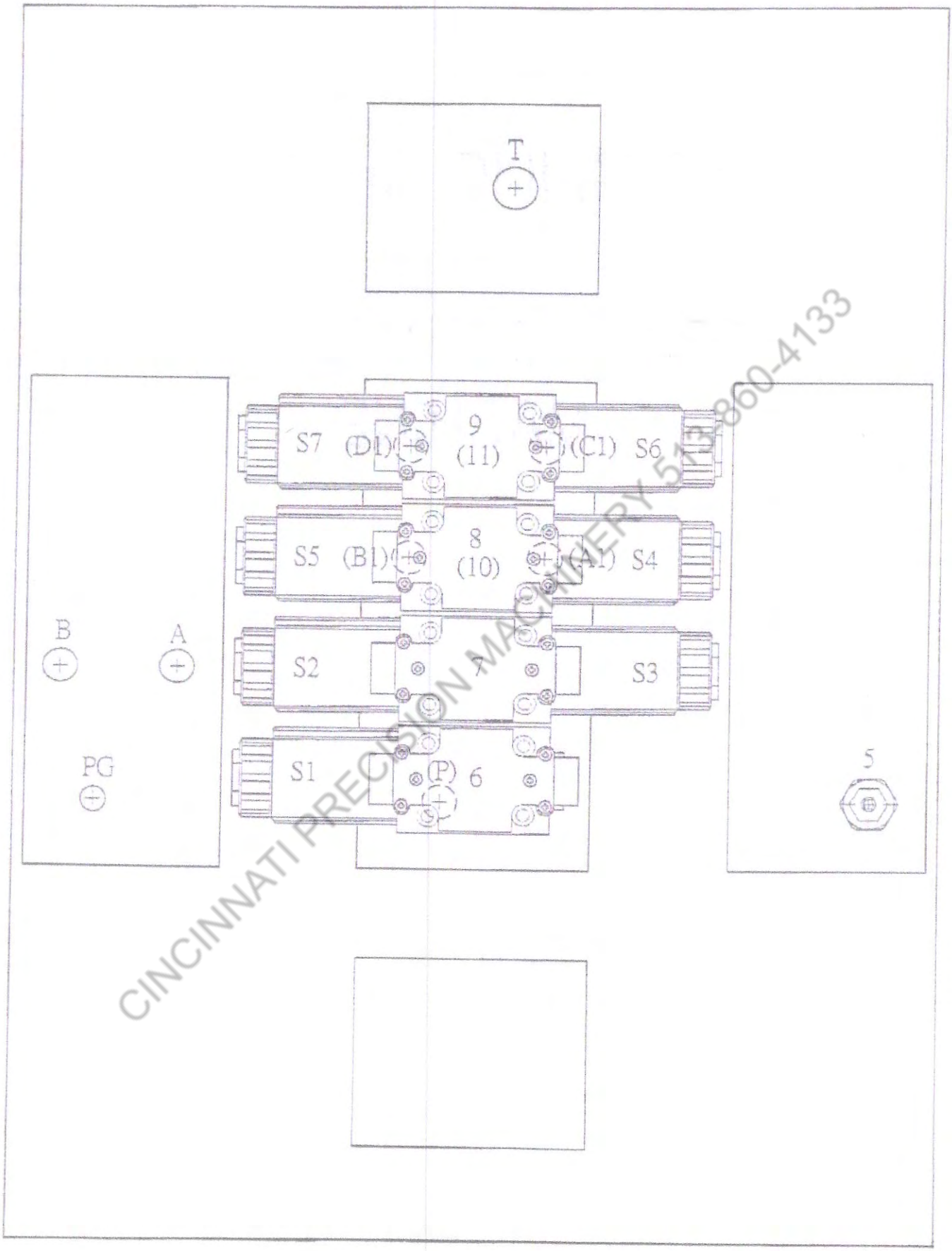

CINCINNATI PRECISION MACHINERY 513-860-4133

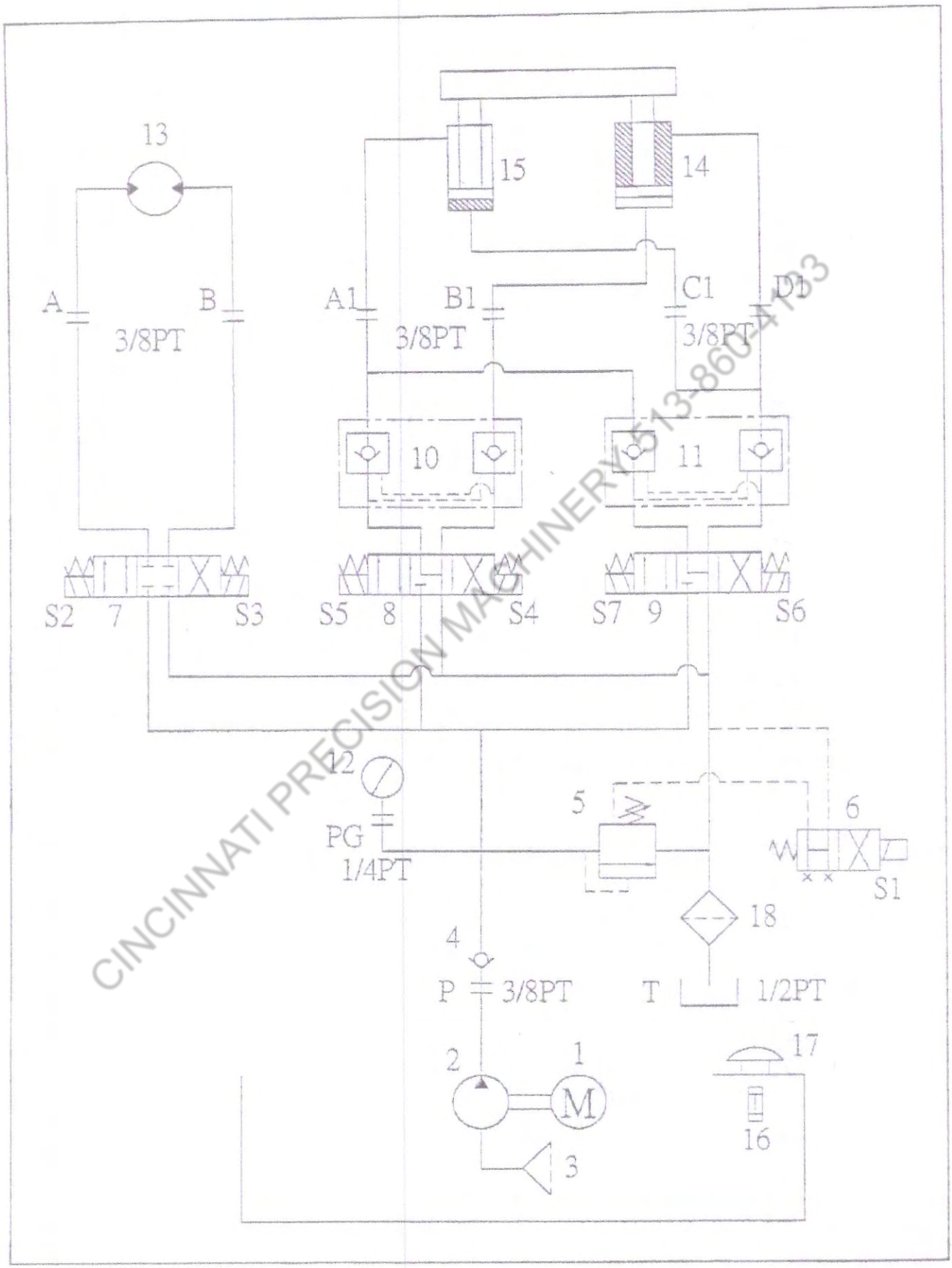

CINCINNATI PRECISION MACHINERY 513-860-4193

METAL SHEET THICKNESS VARIATION IN ACCORDANCE WITH THE ROLLING LENGTH

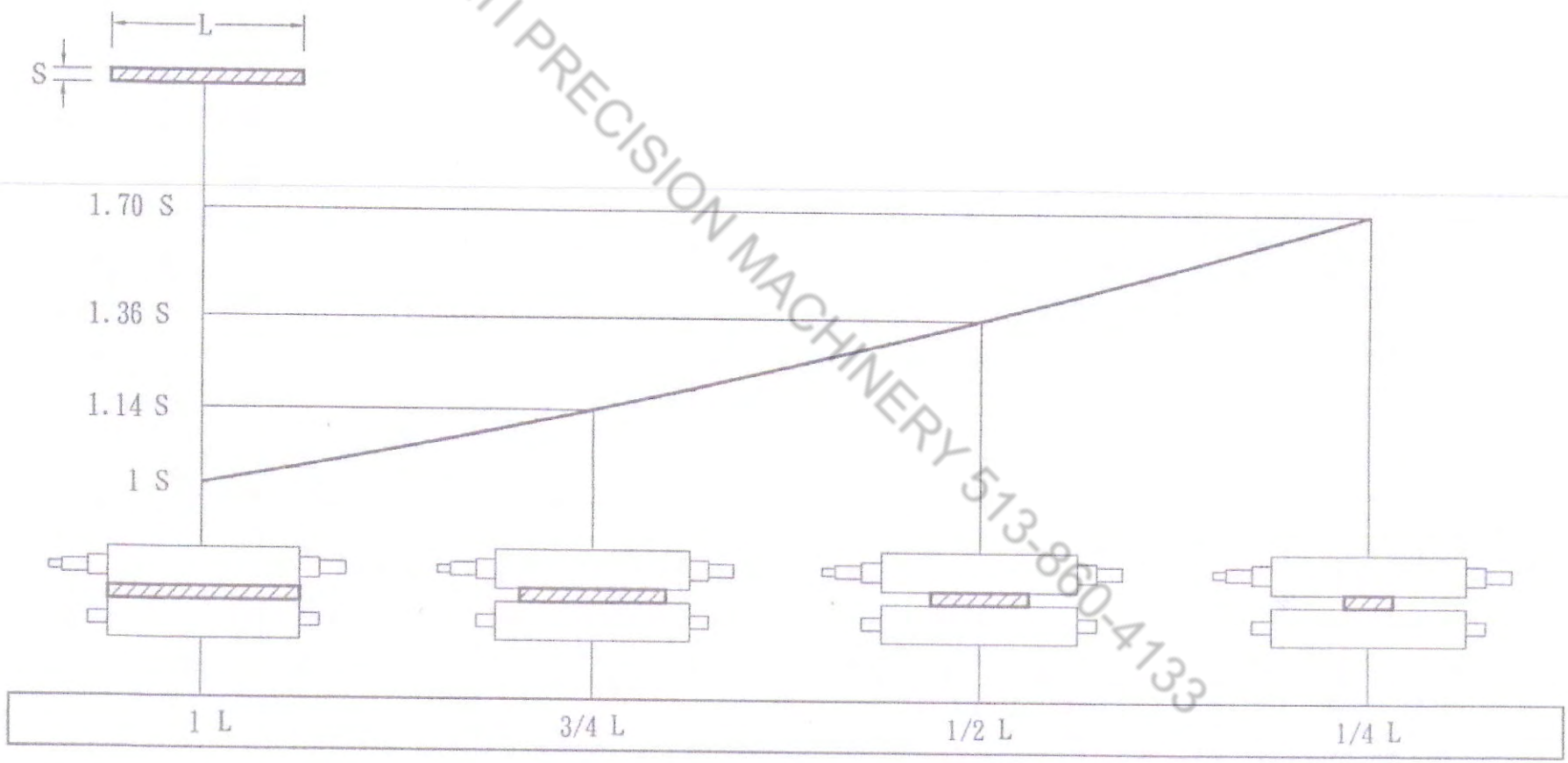

CINCINNATI PRECISION MACHINERY 513-860-4133

METAL SHEET THICKNESS VARIATION IN ACCORDANCE WITH THE ROUNDBENDING DIAMETER :

E = NOMINAL THICKNESS

D = 4 d

e = THICKNESS TO BE ROLLED

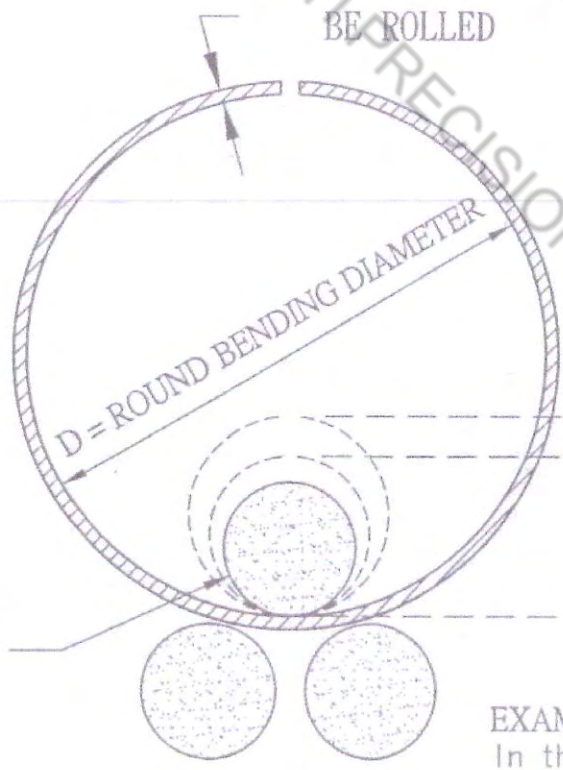

d = OF UPPER ROLLER

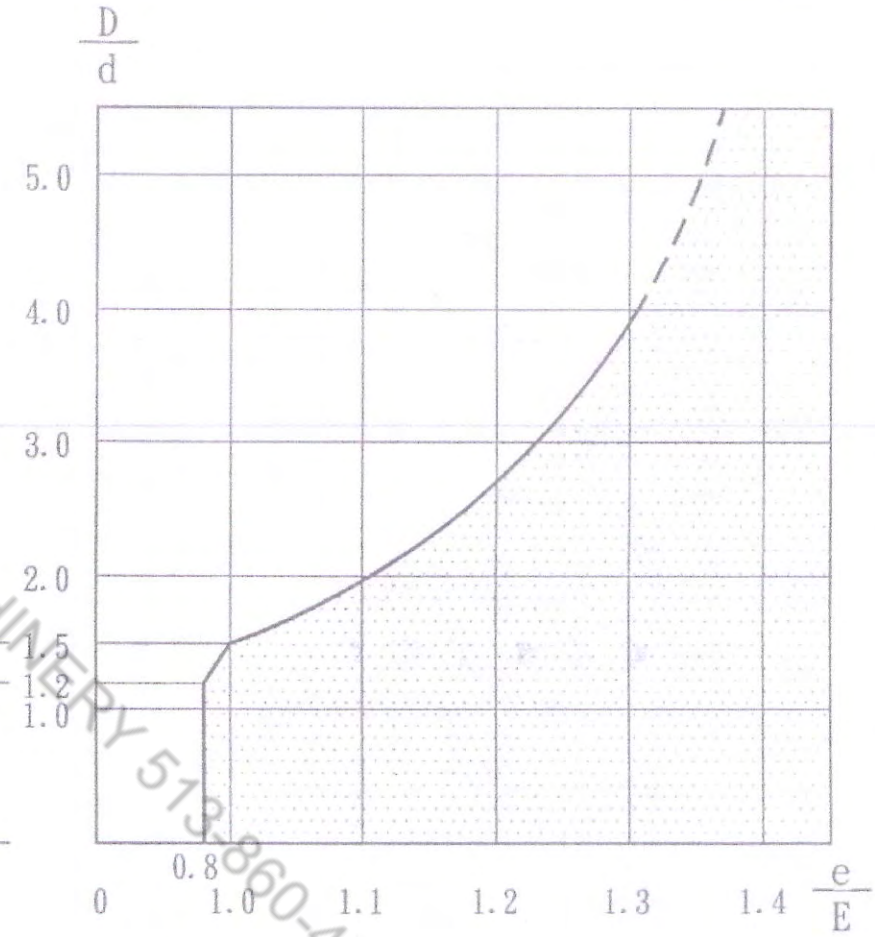

EXAMPLE :
In the graphic we take a working diameter that is 4 times diameter of top roll diameter, and so, we can roll steel plate 1.3 times than when we use prebending capccity is the maxmum on the machine. By technical reasons, the Admissible working area goestill 1.3 times of prebending capacity is approching to maximum of the machine.

CINCINNATI PRECISION MACHINERY 513-860-4133

M \ S	S1	S2	S3	S4	S5	S6	S7
HYD.MOTOR	▲	▲					
HYD.MOTOR	▲		▲				
ROLL UPPER	▲			▲			
ROLL DOWN	▲				▲		
SLOPE UP	▲					▲	
SLOPE DOWN	▲						▲

NO	DESCRIPTION	PART NO
1	MOTOR	
2	PUMP	
3	SYRAINERS	MF-08
4	CHECK VALVE	CV-03
5	RELIEF VALVE	RVCA LAN
6	SOLENOID VALVE	DSG-01-2B3B
7	SOLENOID VALVE	DSG-01-3C2
8	SOLENOID VALVE	DSG-01-3C4
9	SOLENOID VALVE	DSG-01-3C4
10	CHECK VALVE	MPC-02W
11	CHECK VALVE	MPC-02W
12	PRESSURE GAUGE	AT-63 ϕ *250Kg
13	HYD.MOTOR	MLHP125
14	HYD.CYLINDER	ϕ 70
15	HYD.CYLINDER	ϕ 60
16	OIL LEVEL	KS-3"
17	AIR BREATHE	HY-08
18	STRAINER	CG050-P10 / 70134

CINCINNATI PRECISION MACHINERY 513-860-4133

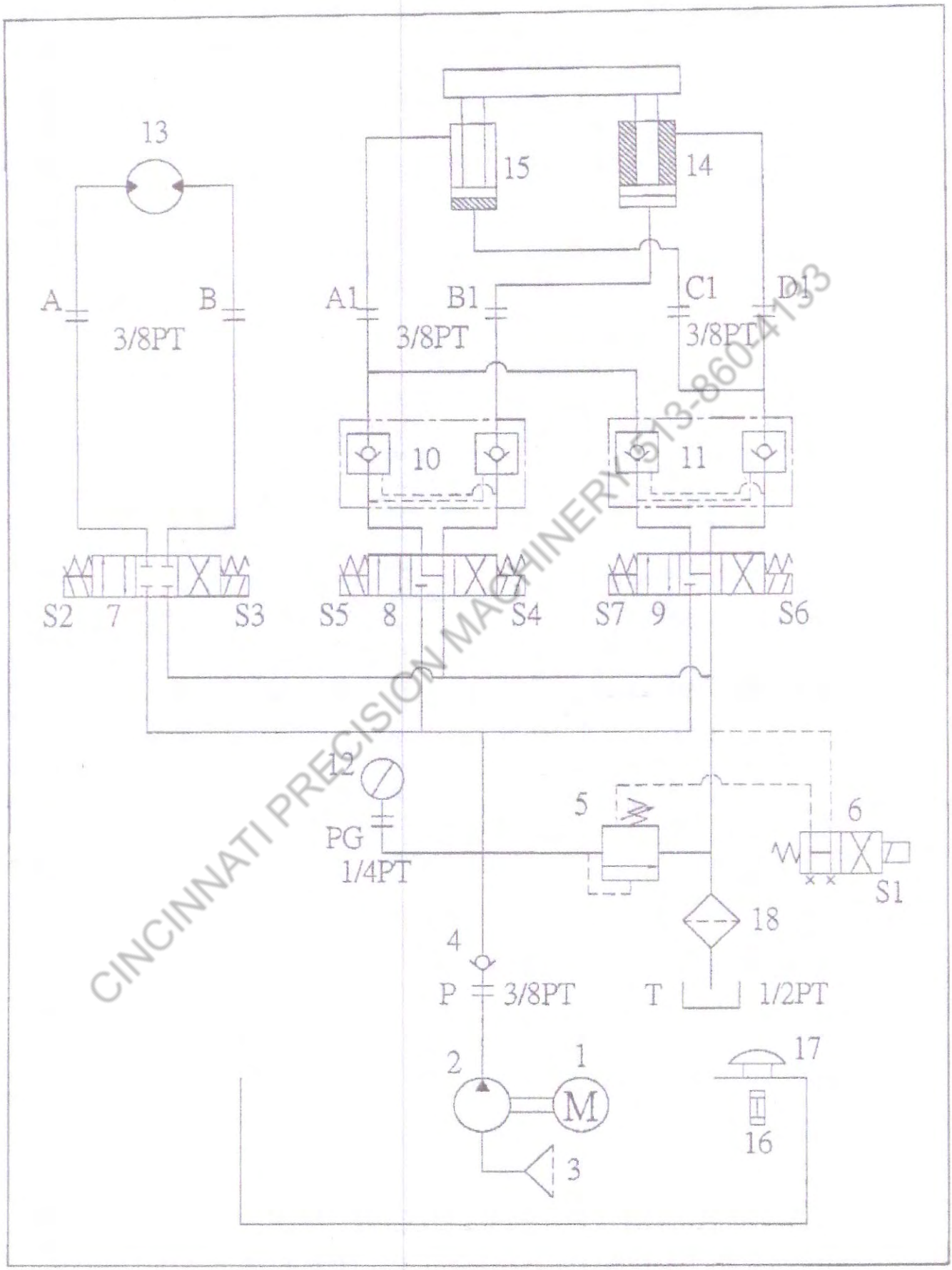

CINCINNATI PRECISION MACHINERY 513-860-4133

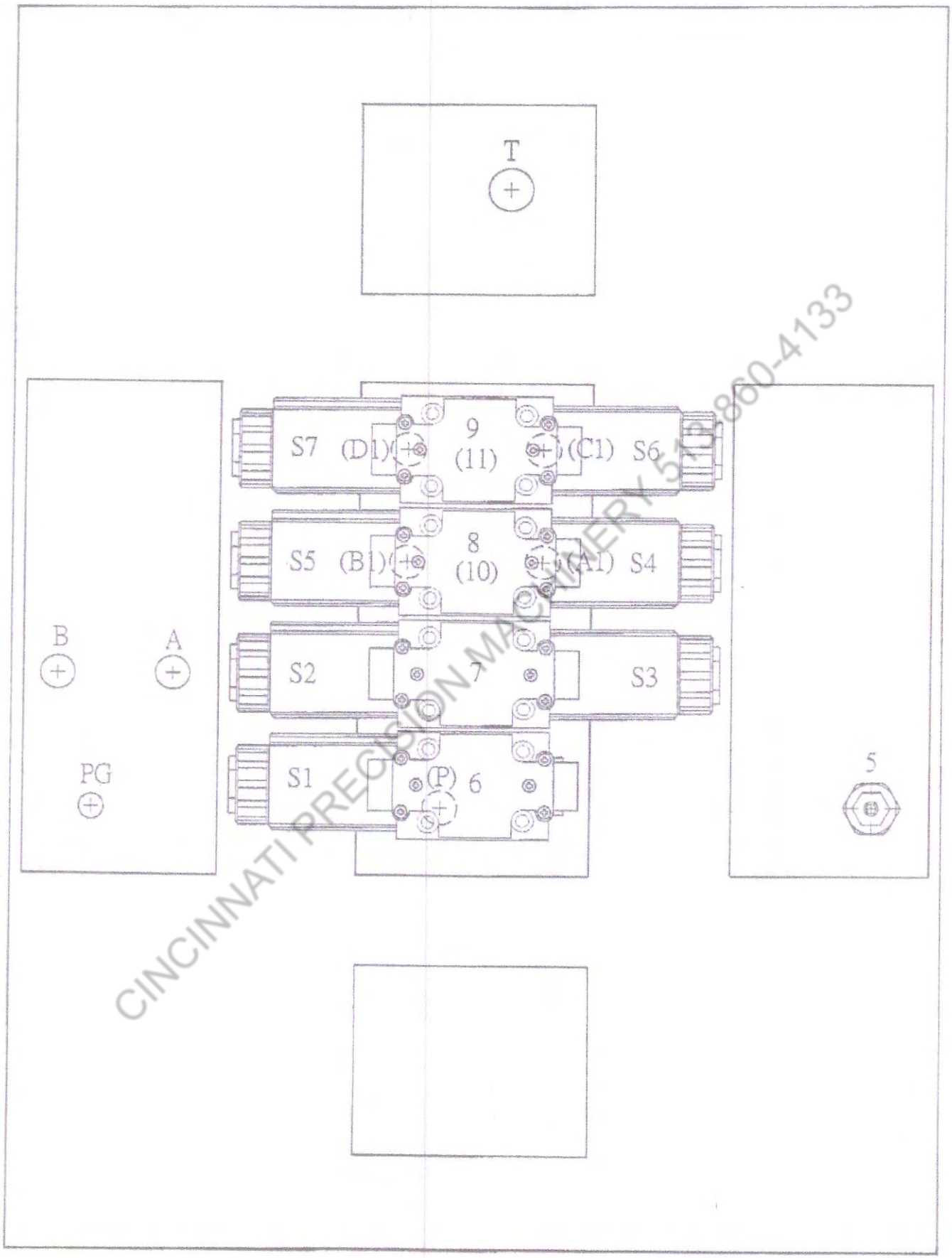

CINCINNATI PRECISION MACHINERY 513-860-4133

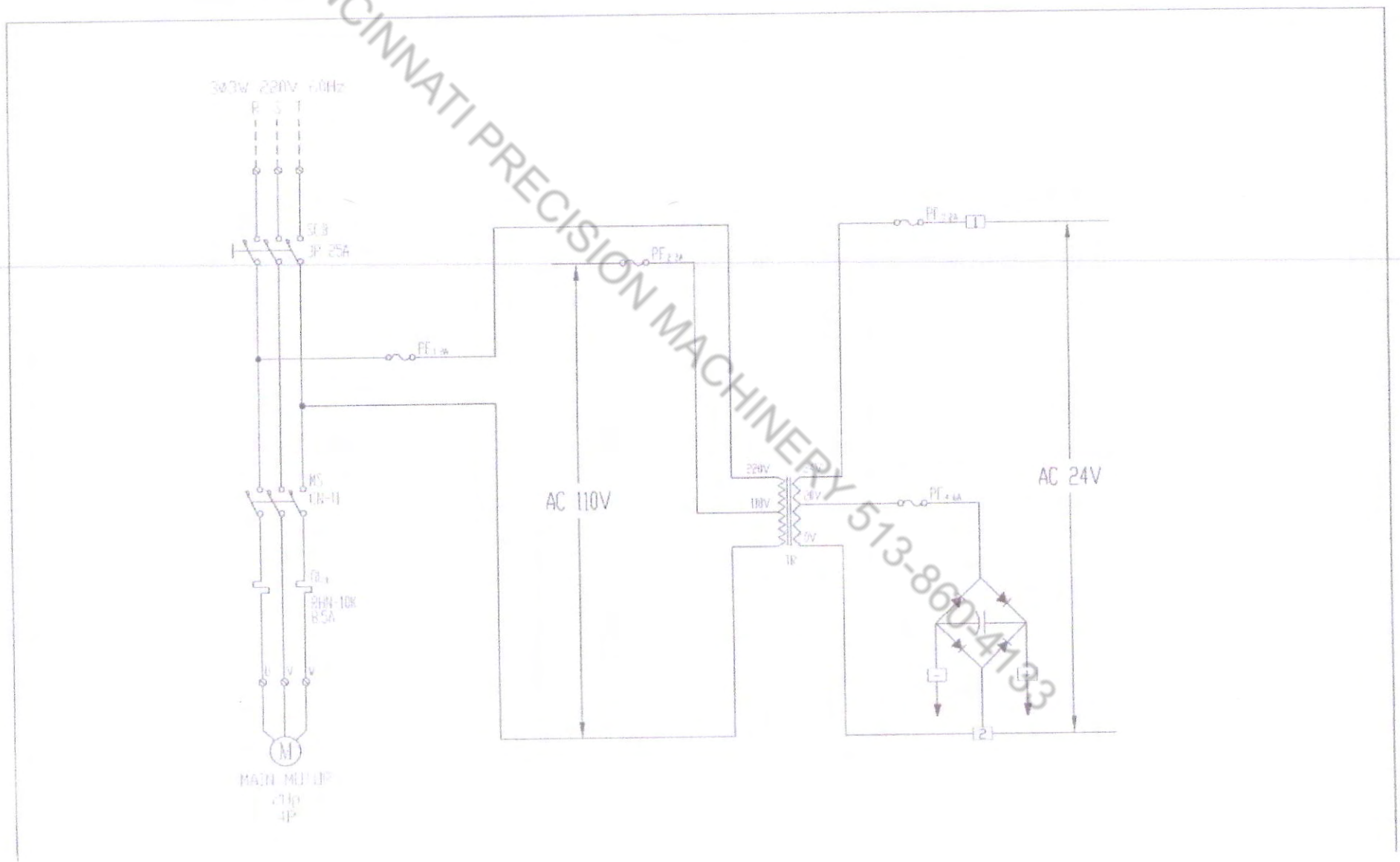

CINCINNATI PRECISION MACHINERY 513-860-4133

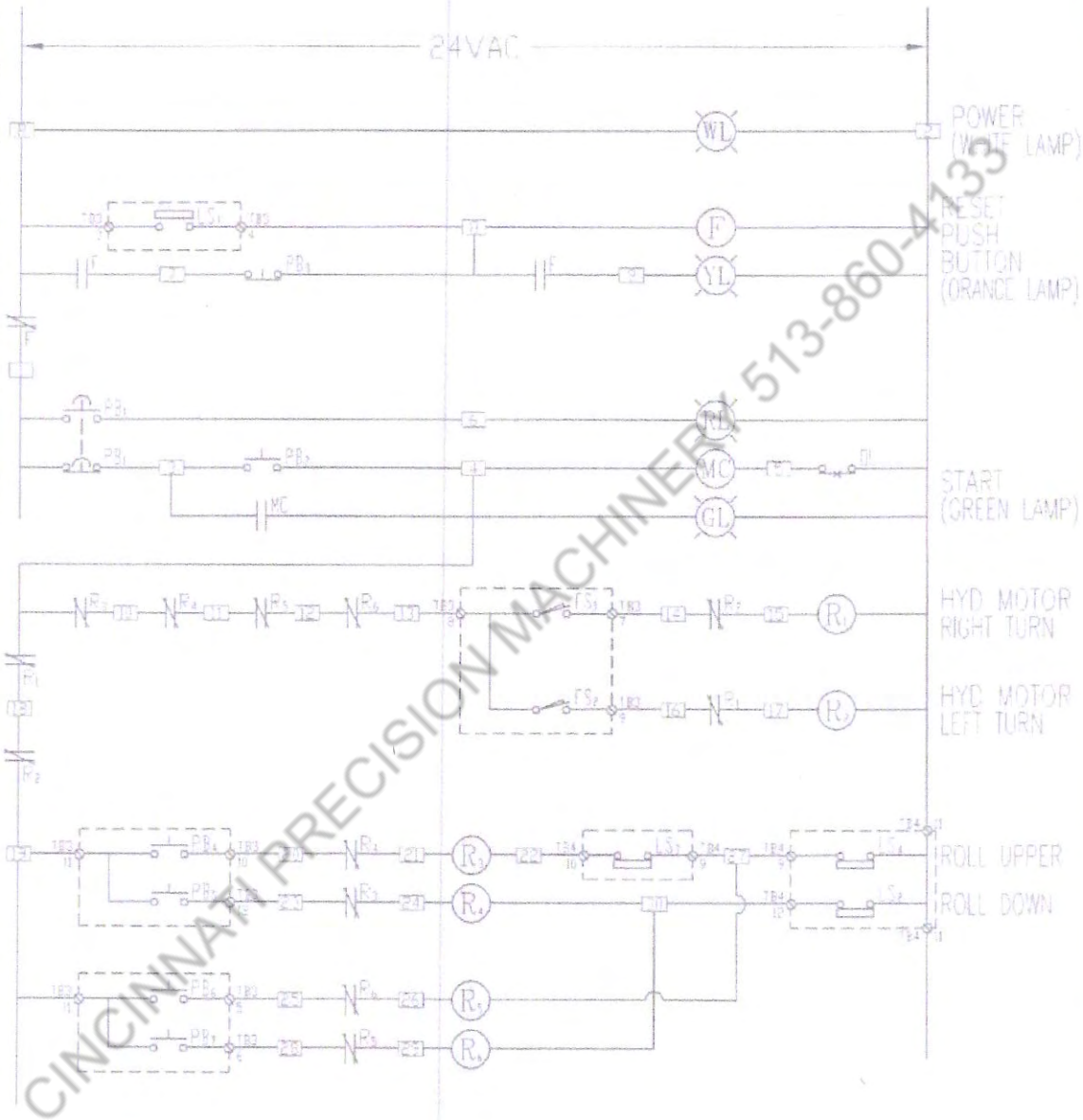

CINCINNATI PRECISION MACHINERY 513-860-4133

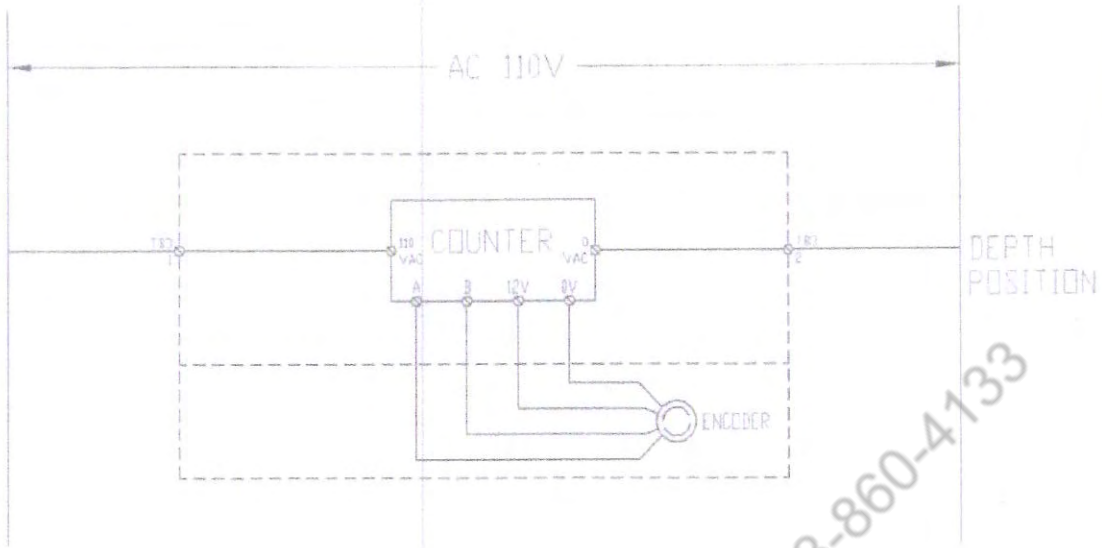

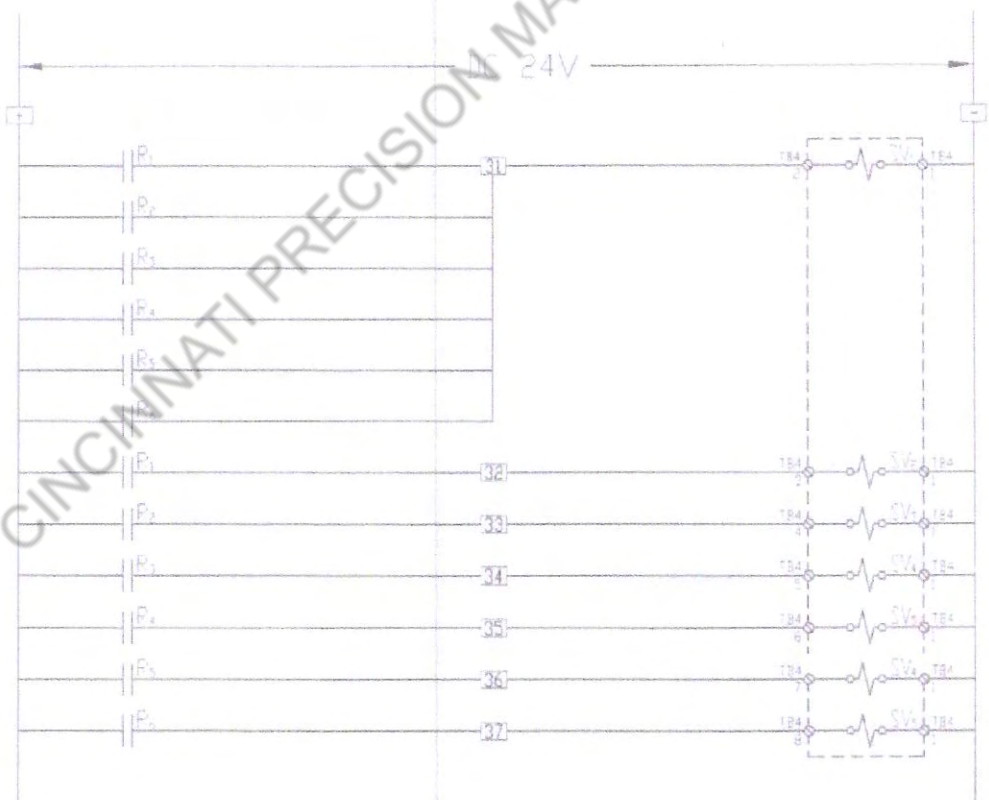

CINCINNATI PRECISION MACHINERY 513-860-4133

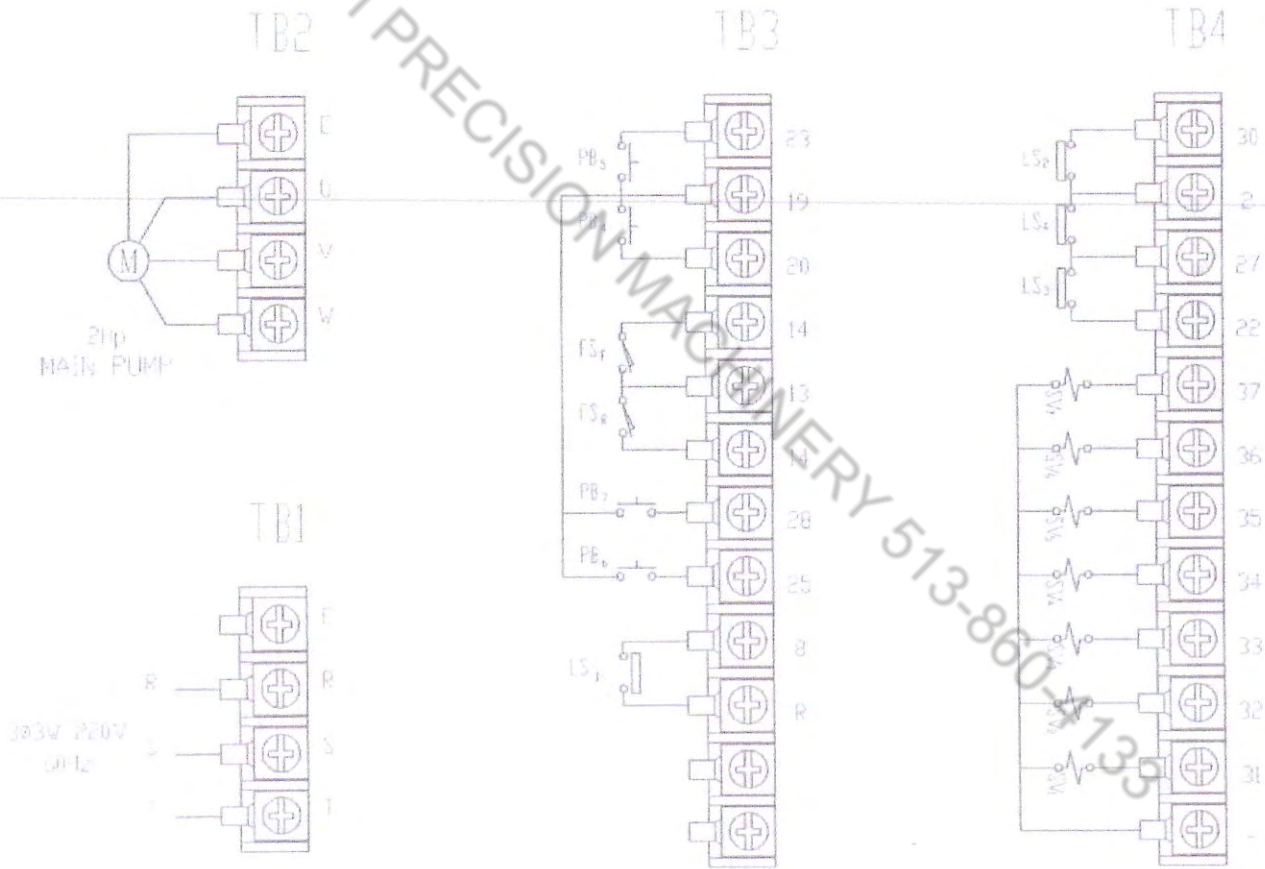

CINCINNATI PRECISION MACHINERY 513-860-4135

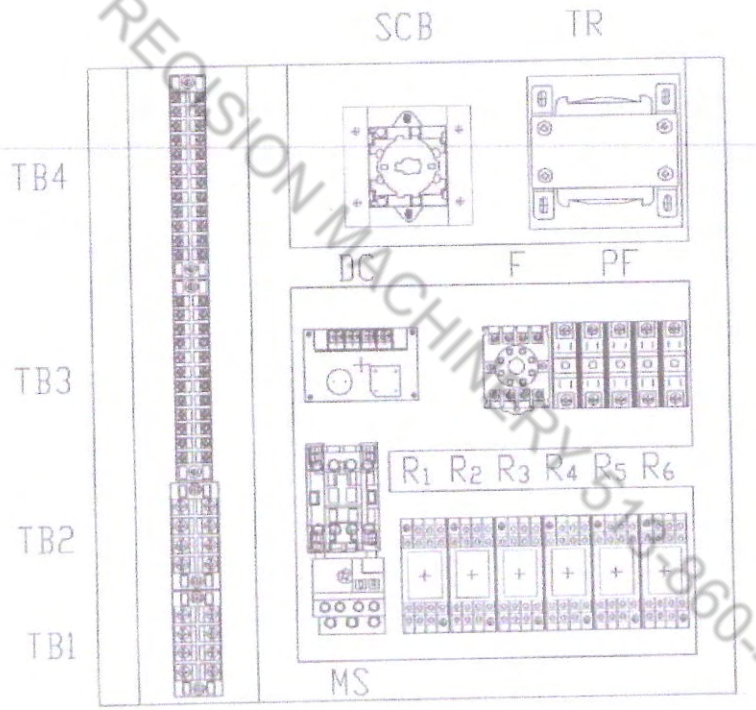

CINCINNATI PRECISION MACHINERY 513-860-4133

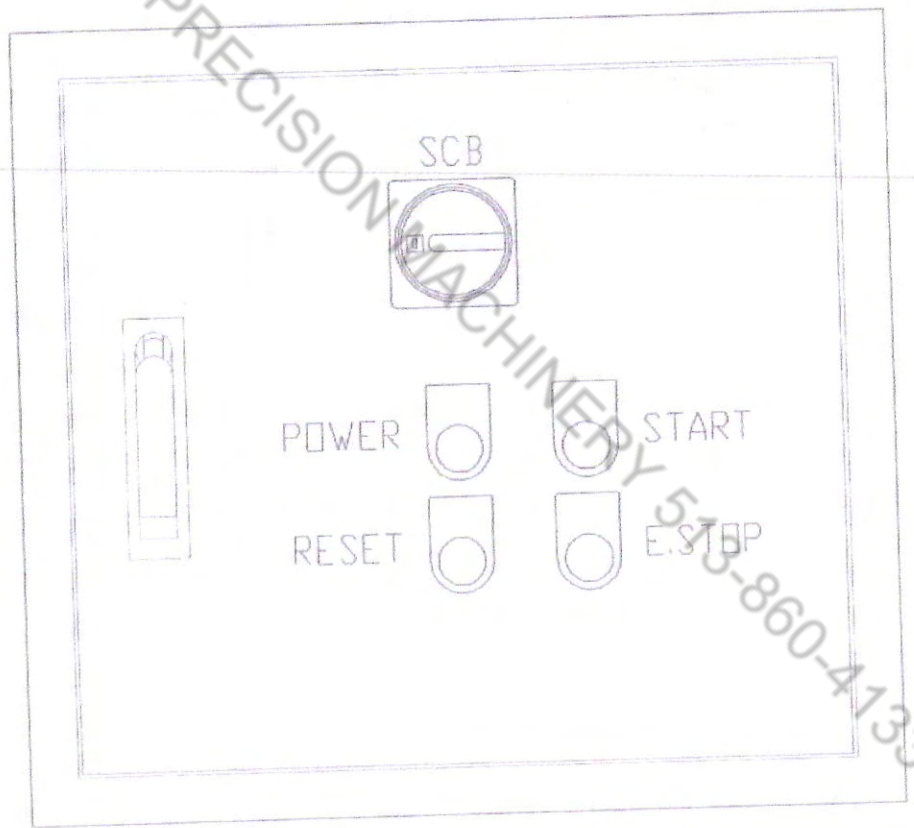

CINCINNATI PRECISION MACHINERY 513-860-4133

No.	MODEL	NAME	SPECIFICATIONS	MARK	NOTE
1	SCB	MAIN SWITCH	P1-25	MODELDR	
2	MS	MAGNETIC SWITCH	HKD-11 24VAC 9.5A	TAIAN	MC,OL
3	TR	TRANSFORMER	1Ø 220-440/20-24-110V 100VA 50Hz		
4	PF	FUSES	10*38mm 2,2,2,6A	DF	PF1-PF4
5	DC	POWER SUPPLY	DC 24V 8A 2000uF		
6	R1-R6	POWER REALY	MY-4 AC 24V	OMRON	
7	TB1,2	TRANS BUS	4P 35A	GIKOKA	
8	TB3,4	TRANS BUS	12P 15A	GIKOKA	
9	WL,GL	PILOT LIGHT	30Ø 24V WHILE	TEND	
10	PB1	PUSH BUTTON	30Ø 1A1B 24V RED (LOCK)	TEND	
11	PB2	PUSH BUTTON	30Ø 1A 24V GREEN	TEND	
12	PB3	PUSH BUTTON	30Ø 1B 24V YELLOW	TEND	
13					
14					
15					
16					
17					
18					
19					
20					
21					
22					
23					
24					
25					

CINCINNATI PRECISION MACHINERY 513-860-4133

CINCINNATI PRECISION MACHINERY 513-860-4133